Key: 6740

Town of Bourne - Fiscal Year 2024

12/18/2023 6:02 pm SEQ #: 6,905

LEGAL

CURRENT OWNER	PARCEL ID	LOCATION
GELNETT KENNETH S ETUX JULIE A GELNETT 10 SHAKER DR BOURNE, MA 02532	31.0-98-0	10 SHAKER DR

TRANSFER HISTORY	DOS	T	SALE PRICE	BK-PG (Cert)
GELNETT KENNETH S ETUX	02/04/2013	F	1	27103-340
GELNETT KENNETH S ETUX	06/12/2003	QS	445,000	17073-336
ZINTER DONALD D &	05/30/1997	QS	249,000	10777-50

CLASS	CLASS%	DESCRIPTION	BN ID	BN	CARD
1010	100	SINGLE FAMILY		1	1 of 1

PMT NO	PMT DT	TY	DESC	AMOUNT	INSP	BY	1st	%
12220	04/04/2012	4	DETACH.STRUC	2,800	08/08/2013	DB	100	100
11570	09/26/2011	8	POOL	23,100	08/08/2013	DB	100	100
950642	12/28/1995	1	NEW CONSTRUC	150,000	04/24/1997	JS	100	100

LAND

CD	T	AC/SF/UN	Nbhd	Infl1	N_Index	ADJ BASE	SAF	Topo	Lpi	VC	CREDIT AMT	ADJ VALUE
100	S	18,133	9 1.00	100 1.00	100 1.00	259,270	1.86	A 1.00	R06 1.10			200,280

TOTAL	18,121 SF	ZONING	1	FRNT	0

Nbhd	MO BCH
Infl1	AVG
N_Index	AVG

NOTE

ASSESSED	CURRENT	PREVIOUS
LAND	200,300	177,300
BUILDING	441,300	395,400
DETACHED	26,000	24,700
OTHER	0	0
TOTAL	**667,600**	**597,400**

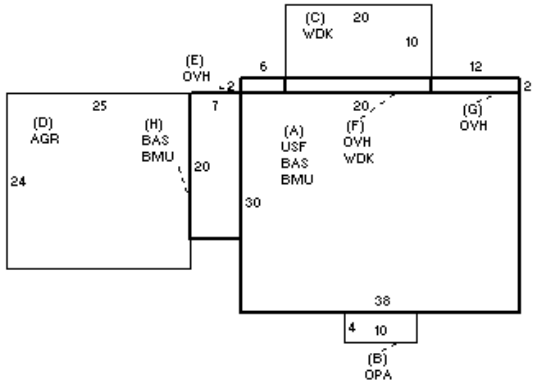

DETACHED

TY	QUAL	COND	DIM/NOTE	YB	UNITS	ADJ PRICE	RCNLD
SHF	+ 1.10	10 0.90	8 X 9			0.00	
IPG	E 1.90	10 0.90	16 X 32	2011	512	56.46	26,000

PHOTO 08/19/2008

BLDG COMMENTS

BUILDING

BUILDING	CD	ADJ	DESC
MODEL	1		RESIDENTIAL
STYLE	5	1.00	COLONIAL [100%]
QUALITY	+	1.05	AVERAGE + [100%]
FRAME	1	1.00	WOOD FRAME [100%]

MEASURE	8/8/2013	DB
LIST	8/8/2013	EST
REVIEW	8/8/2013	ER

YEAR BLT	1996	SIZE ADJ	1.005
NET AREA	2,496	DETAIL ADJ	1.000
$NLA(RCN)	$221	OVERALL	1.080

CAPACITY	UNITS	ADJ
STORIES	2	1.00
ROOMS	8	1.00
BEDROOMS	4	1.00
BATHROOMS	2	1.00
FIXTURES	12	1.00
GARAGE CAPACITY	2	1.00
% BSMT FINISH	0	1.00
# OF HALF BATHS	1	1.00
# OF UNITS	1	1.00

ELEMENT	CD	DESCRIPTION	ADJ
FOUNDATION	4	FLR/WALL(FULL)	1.00
EXT COVER	1	WOOD SHINGLE	1.02
ROOF SHAPE	2	HIP	1.02
ROOF COVER	1	ASPH/COMP SHIN	1.00
FLOOR COVER	1	HARDWOOD	1.02
INT. FINISH	2	DRYWALL	1.00
HEATING/COOLING	2	HOT WATER	1.02
FUEL SOURCE	2	GAS	1.00
USE	0		1.00

S	BAT	T	DESCRIPTION	UNITS	YB	ADJ PRICE	RCN
+	BMU	N	BSMT UNFINISHED	1,280		36.41	46,603
+	BAS	L	BASE AREA	1,280	1996	214.24	274,224
A	USF	L	UPPER STORY FIN	1,140	1996	118.49	135,078
B	OPA	N	OPEN PORCH	40		92.86	3,714
+	WDK	N	WOOD DECK	240		29.52	7,084
D	AGR	N	ATT GARAGE	600		70.44	42,262
+	OVH	L	OVERHANG	76	1996	206.40	15,686
	F21	O	FPL 2S 1OP	1		10,039.40	10,039
	FIX	O	XTRA FIXTURES	7		2,427.01	16,989

TOTAL RCN	551,681

CONDITION ELEM	CD
EXTERIOR	A
INTERIOR	A
KITCHEN	A
BATHS	A
HEAT	A
ELECT	A

EFF.YR/AGE	1999 / 23	
COND	20	20 %
FUNC	0	
ECON	0	
DEPR	20	% GD 80
RCNLD		$441,300