Key: 7647

Town of Bourne - Fiscal Year 2024

12/18/2023 6:02 pm SEQ #: 7,802

LEGAL

CURRENT OWNER	PARCEL ID	LOCATION
VENO JONATHAN W JANE E VENO 17 TARA TERRACE BUZZARDS BAY, MA 02532-3881	35.2-93-0	17 TARA TERR

TRANSFER HISTORY	DOS	T	SALE PRICE	BK-PG (Cert)
VENO JONATHAN W	06/22/1998	QS	145,000	11517-231

CLASS	CLASS%	DESCRIPTION	BN ID	BN	CARD
1010	100	SINGLE FAMILY		1	1 of 1

PMT NO	PMT DT	TY	DESC	AMOUNT	INSP	BY	1st	%
900410	08/14/1990	8	POOL	4,200	11/18/1991	HS	100	100

LAND

CD	T	AC/SF/UN	Nbhd	Infl1	N_Index	ADJ BASE	SAF	Topo	Lpi	VC	CREDIT AMT	ADJ VALUE
100	S	20,000	9 1.00	100 1.00	100 1.00	235,700	1.71	A 1.00	R04 1.00			185,010

TOTAL	19,994 SF	ZONING	1	FRNT	0
Nbhd	MO BCH	NOTE			
Infl1	AVG				
N_Index	AVG				

ASSESSED	CURRENT	PREVIOUS
LAND	185,000	163,700
BUILDING	358,300	317,200
DETACHED	1,700	1,600
OTHER	0	0
TOTAL	**545,000**	**482,500**

DETACHED

TY	QUAL	COND	DIM/NOTE	YB	UNITS	ADJ PRICE	RCNLD
SHF	A 1.00	A 0.75	10 X 14		140	16.42	1,700

PHOTO 09/16/1999

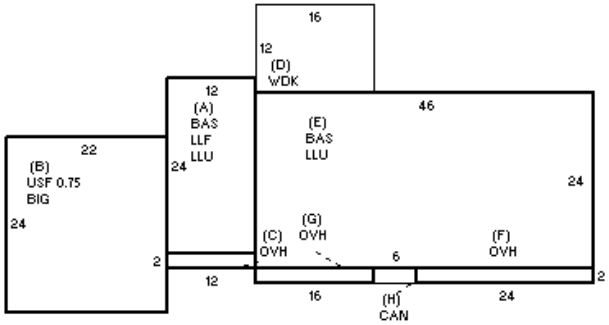

BUILDING

BUILDING	CD	ADJ	DESC
MODEL	1		RESIDENTIAL
STYLE	2	1.00	RAISED RANCH [100%]
QUALITY	A	1.00	AVERAGE [100%]
FRAME	1	1.00	WOOD FRAME [100%]

MEASURE	2/25/2008	TL
LIST	2/25/2008	TL
REVIEW	2/25/2008	TL

BLDG COMMENTS

YEAR BLT	1985	SIZE ADJ	1.005
NET AREA	2,180	DETAIL ADJ	1.000
$NLA(RCN)	$216	OVERALL	1.040

CAPACITY	UNITS	ADJ
STORIES	1	1.00
ROOMS	7	1.00
BEDROOMS	4	1.00
BATHROOMS	2	1.00
FIXTURES	8	1.00
GARAGE CAPACITY	2	1.00
% BSMT FINISH	0	1.00
# OF HALF BATHS	0	1.00
# OF UNITS	1	1.00

ELEMENT	CD	DESCRIPTION	ADJ
FOUNDATION	4	FLR/WALL(FULL)	1.00
EXT COVER	1	WOOD SHINGLE	1.02
ROOF SHAPE	1	GABLE	1.00
ROOF COVER	1	ASPH/COMP SHIN	1.00
FLOOR COVER	35	W/W-VINYL	1.00
INT. FINISH	2	DRYWALL	1.00
HEATING/COOLING	2	HOT WATER	1.02
FUEL SOURCE	1	OIL	1.00
USE	0		1.00

S	BAT	T	DESCRIPTION	UNITS	YB	ADJ PRICE	RCN
+	LLU	N	LOWER LEVEL UNF	1,392		32.51	45,255
A	LLF	L	LOWER LEVEL FIN	288	1985	73.37	21,131
+	BAS	L	BASE AREA	1,392	1985	196.48	273,499
B	BIG	N	BUILT-IN GARAGE	528		81.95	43,269
B	USF	L	UPPER STORY FIN	396	1985	115.01	45,543
+	OVH	L	OVERHANG	104	1985	189.28	19,685
D	WDK	N	WOOD DECK	192		36.56	7,020
H	CAN	N	CANOPY	12		16.20	194
	F21	O	FPL 2S 1OP	1		9,207.20	9,207
	FIX	O	XTRA FIXTURES	3		2,225.93	6,678

TOTAL RCN	471,480
CONDITION ELEM	CD
EXTERIOR	F
INTERIOR	A
KITCHEN	A
BATHS	A
HEAT	A
ELECT	A
EFF.YR/AGE	1995 / 27
COND	24 24 %
FUNC	0
ECON	0
DEPR	24 % GD 76
RCNLD	$358,300