Key: 7712

Town of Bourne - Fiscal Year 2024

12/18/2023 6:02 pm SEQ #: 7,867

LEGAL

CURRENT OWNER	PARCEL ID	LOCATION
LOMBARD EUGENIA F P O BOX 126 POCASSET, MA 02559-0126	37.0-19-0	48 OLD NORTH RD

TRANSFER HISTORY	DOS	T	SALE PRICE	BK-PG (Cert)
LOMBARD EUGENIA F	01/12/2001	A	950,000	()
LOMBARD EUGENIA F & LANGD	01/12/2001	A		13482-334
LOMBARD EUGENIA F TR OF	08/01/1995	XX		9781-35

CLASS	CLASS%	DESCRIPTION	BN ID	BN	CARD
1010	100	SINGLE FAMILY		1	1 of 1

PMT NO	PMT DT	TY	DESC	AMOUNT	INSP	BY	1st	%
	01/14/2016	13	OTHER				100	100
990054	02/01/1999	9	DECK	2,500	11/18/1999	MS	100	100
980299	06/05/1998	3	ALT/RENO	3,340	09/20/1999	MWS	100	100

LAND

CD	T	AC/SF/UN	Nbhd		Infl1		N_Index		ADJ BASE	SAF	Topo		Lpi		VC	CREDIT AMT	ADJ VALUE
100	S	40,000	11	1.00	100	1.00	100	1.00	1,414,200	1.00	A	1.00	BSP	6.00			1,298,360
300	A	3.134	11	1.00	100	1.00	100	1.00	97,800	1.00	A	1.00	BSP	6.00			306,510

TOTAL	4.052 Acres	ZONING	1	FRNT	206
Nbhd	POC	NOTE	FY12 - RMVD 200 LAND CODE		
Infl1	AVG				
N_Index	AVG				

ASSESSED	CURRENT	PREVIOUS
LAND	1,604,900	1,419,900
BUILDING	755,800	668,800
DETACHED	2,300	2,200
OTHER	0	0
TOTAL	**2,363,000**	**2,090,900**

DETACHED

TY	QUAL		COND		DIM/NOTE	YB	UNITS	ADJ PRICE	RCNLD
SHF	A	1.00	10	0.90	10 X 16		160	15.95	2,300

PHOTO 05/31/2001

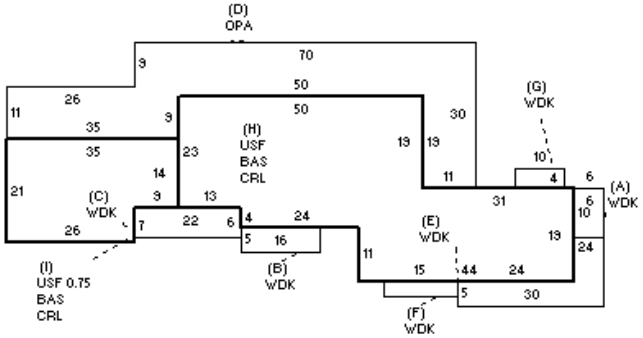

BLDG COMMENTS

BUILDING

BUILDING	CD	ADJ	DESC
MODEL	1		RESIDENTIAL
STYLE	7	0.93	CONVENTIONAL [78%]
QUALITY	A	1.00	AVERAGE [100%]
FRAME	1	1.00	WOOD FRAME [100%]

MEASURE	5/31/2001	TL
LIST	1/16/2009	TL
REVIEW	1/14/2016	DB

YEAR BLT	1903	SIZE ADJ	0.975
NET AREA	5,236	DETAIL ADJ	1.000
$NLA(RCN)	$157	OVERALL	0.993

CAPACITY	UNITS	ADJ
STORIES	1.75	1.00
ROOMS	18	1.00
BEDROOMS	10	1.00
BATHROOMS	4	1.00
FIXTURES	18	1.00
GARAGE CAPACITY	0	1.00
% BSMT FINISH	0	1.00
# OF HALF BATHS	0	1.00
# OF UNITS	1	1.00

ELEMENT	CD	DESCRIPTION	ADJ
FOUNDATION	3	FOUN. WALL	1.00
EXT COVER	1	WOOD SHINGLE	1.02
ROOF SHAPE	1	GABLE	1.00
ROOF COVER	1	ASPH/COMP SHIN	1.00
FLOOR COVER	1	HARDWOOD	1.02
INT. FINISH	1	PLASTER	1.00
HEATING/COOLING	2	HOT WATER	1.02
FUEL SOURCE	2	GAS	1.00
USE	0		1.00

S	BAT	T	DESCRIPTION	UNITS	YB	ADJ PRICE	RCN
+	WDK	N	WOOD DECK	621		20.68	12,843
D	OPA	N	OPEN PORCH	1,346		52.50	70,664
+	CRL	N	BSMT CRAWL	2,702		14.86	40,146
H	BAS	L	BASE AREA	2,030	1903	159.21	323,188
H	USF	L	UPPER STORY FIN	2,030	1903	83.88	170,282
I	BAS	L	BASE AREA	672	1903	159.21	106,986
I	USF	L	UPPER STORY FIN	504	1903	83.88	42,277
	F22	O	FPL 2S 2OP			0.00	
	F23	O	FPL 2S 3OP	2		9,315.80	18,632
	FIX	O	XTRA FIXTURES	13		2,061.84	26,804
	KIT	O	EXTRA KITCHEN	2		4,862.65	9,725

TOTAL RCN	821,547

CONDITION ELEM	CD
EXTERIOR	G
INTERIOR	G
KITCHEN	G
BATHS	G
HEAT	U
ELECT	U

EFF.YR/AGE	2011 / 11		
COND	8	8 %	
FUNC	0		
ECON	0		
DEPR	8	% GD	92
RCNLD			$755,800