Key: 7738

Town of Bourne - Fiscal Year 2024

12/18/2023 6:02 pm SEQ #: 7,895

LEGAL

CURRENT OWNER	PARCEL ID	LOCATION
GALBRAITH BETTY J C/O ELIAS JOSEPH & 28 PIER VIEW RD POCASSET, MA 02559	37.4-19-0	28 PIER VIEW RD

TRANSFER HISTORY	DOS	T	SALE PRICE	BK-PG (Cert)
ELIAS JOSEPH &	10/17/2023	QS	1,690,000	36039-49
GALBRAITH BETTY J	09/11/2001	X		14222-336
GALBRAITH JAMES S		XX		01375-1078

CLASS	CLASS%	DESCRIPTION	BN ID	BN	CARD
1010	100	SINGLE FAMILY		1	1 of 1

PMT NO	PMT DT	TY	DESC	AMOUNT	INSP	BY	1st	%

LAND

CD	T	AC/SF/UN	Nbhd	Infl1	N Index	ADJ BASE	SAF	Topo	Lpi	VC	CREDIT AMT	ADJ VALUE
100	S	14,206	11 1.00	100 1.00	100 1.00	1,414,200	2.29	A 1.00	BSP 6.00			1,055,520

TOTAL	14,201 SF	ZONING	1	FRNT	0
Nbhd	POC	NOTE	Concrete retaining wall		
Infl1	AVG				
N_Index	AVG				

ASSESSED	CURRENT	PREVIOUS
LAND	1,055,500	934,200
BUILDING	254,900	190,900
DETACHED	0	0
OTHER	0	0
TOTAL	**1,310,400**	**1,125,100**

DETACHED

TY	QUAL	COND	DIM/NOTE	YB	UNITS	ADJ PRICE	RCNLD

PHOTO 09/06/2023

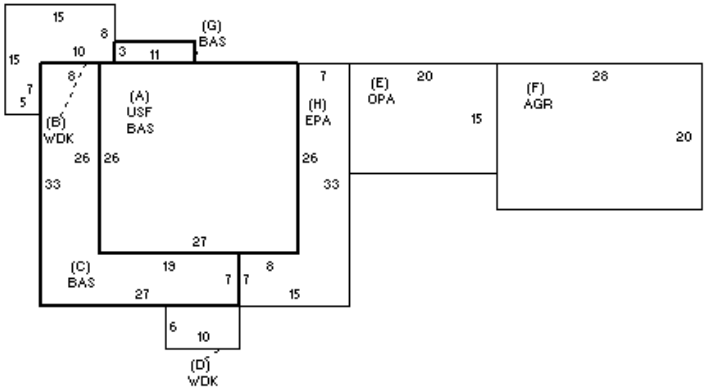

BLDG COMMENTS

BUILDING

BUILDING	CD	ADJ	DESC
MODEL	1		RESIDENTIAL
STYLE	7	1.00	CONVENTIONAL [100%]
QUALITY	A	1.00	AVERAGE [100%]
FRAME	1	1.00	WOOD FRAME [100%]

MEASURE	9/6/2023	SL
LIST	9/6/2023	SL
REVIEW	9/14/2023	RP

YEAR BLT	1925	SIZE ADJ	1.010
NET AREA	1,834	DETAIL ADJ	1.000
$NLA(RCN)	$183	OVERALL	0.840

CAPACITY	UNITS	ADJ
STORIES	2	1.00
ROOMS	8	1.00
BEDROOMS	4	1.00
BATHROOMS	1	1.00
FIXTURES	7	1.00
GARAGE CAPACITY	2	1.00
% BSMT FINISH	0	1.00
# OF HALF BATHS	1	1.00
# OF UNITS	1	1.00

ELEMENT	CD	DESCRIPTION	ADJ
FOUNDATION	3	FOUN. WALL	1.00
EXT COVER	1	WOOD SHINGLE	1.02
ROOF SHAPE	2	HIP	1.02
ROOF COVER	1	ASPH/COMP SHIN	1.00
FLOOR COVER	2	SOFTWOOD	1.02
INT. FINISH	3	WOOD PANEL	0.98
HEATING/COOLING	13	NONE	0.80
FUEL SOURCE	8	NONE	1.00
USE	0		1.00

S	BAT	T	DESCRIPTION	UNITS	YB	ADJ PRICE	RCN
+	BAS	L	BASE AREA	1,132	1925	162.86	184,362
A	USF	L	UPPER STORY FIN	702	1925	92.25	64,759
+	WDK	N	WOOD DECK	215		21.97	4,724
E	OPA	N	OPEN PORCH	300		49.93	14,979
F	AGR	N	ATT GARAGE	560		52.44	29,364
H	EPA	N	ENCLOSED PORCH	287		55.34	15,884
	CRL	N	BSMT CRAWL	351		29.07	10,202
	F21	O	FPL 2S 1OP	1		7,473.60	7,474
	FIX	O	XTRA FIXTURES	2		1,806.65	3,613

TOTAL RCN	335,362

CONDITION ELEM	CD
EXTERIOR	A
INTERIOR	A
KITCHEN	A
BATHS	A
HEAT	A
ELECT	A

EFF.YR/AGE	1995 / 27		
COND	24	24 %	
FUNC	0		
ECON	0		
DEPR	24	% GD	76
RCNLD			$254,900