Key: 776

Town of Bourne - Fiscal Year 2024

12/18/2023 6:02 pm SEQ #: 776

LEGAL

CURRENT OWNER	PARCEL ID	LOCATION
MARCHIONNE FLORINDA M & CECILE L KILEY & JOSEPH C MARCHIONNE* 63 SHERBOURNE PLACE WALTHAM, MA 02451	4.4-25-0	20 PHILLIPS RD

TRANSFER HISTORY	DOS	T	SALE PRICE	BK-PG (Cert)
MARCHIONNE FLORINDA M & C	07/28/2011	F	100	25588-168
MARCHIONNE FLORINDA M TR	07/19/2011	F	100	25570-51
MARCHIONNE FLORINDA M	03/10/2011	N		25310-133/4

CLASS	CLASS%	DESCRIPTION	BN ID	BN	CARD
1010	100	SINGLE FAMILY		1	1 of 1

PMT NO	PMT DT	TY	DESC	AMOUNT	INSP	BY	1st	%
		12	CYCLICAL		01/29/2018	BC	100	100
		12	CYCLICAL		06/23/2008	JH	100	100
890672	11/01/1989	3	ALT/RENO	15,000	06/05/1990	HS	100	100

LAND

CD	T	AC/SF/UN	Nbhd	Infl1	N_Index	ADJ BASE	SAF	Topo	Lpi	VC	CREDIT AMT	ADJ VALUE
100	S	14,218	1 1.00	100 1.00	100 1.00	848,520	2.29	A 1.00	BVG 3.60			633,370

TOTAL	14,201 SF	ZONING	1	FRNT	129
Nbhd	N SAG	NOTE			
Infl1	AVG				
N_Index	AVG				

ASSESSED	CURRENT	PREVIOUS
LAND	633,400	560,600
BUILDING	380,900	337,100
DETACHED	400	400
OTHER	0	0
TOTAL	**1,014,700**	**898,100**

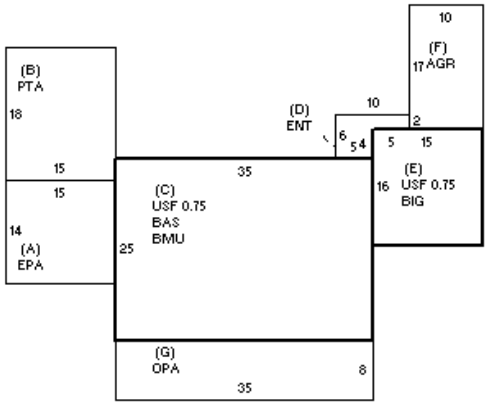

DETACHED

TY	QUAL	COND	DIM/NOTE	YB	UNITS	ADJ PRICE	RCNLD
PTD	A 1.00	50 0.50	12 X 16		192	4.47	400

PHOTO 01/29/2018

BLDG COMMENTS

BUILDING

BUILDING	CD	ADJ	DESC
MODEL	1		RESIDENTIAL
STYLE	4	1.05	CAPE [100%]
QUALITY	+	1.05	AVERAGE + [100%]
FRAME	1	1.00	WOOD FRAME [100%]

MEASURE	1/3/2022	NMP
LIST	1/29/2018	EST
REVIEW	1/29/2018	BC

YEAR BLT	1900	SIZE ADJ	1.010
NET AREA	1,711	DETAIL ADJ	1.000
$NLA(RCN)	$271	OVERALL	1.110

CAPACITY	UNITS	ADJ
STORIES	1.75	1.00
ROOMS	8	1.00
BEDROOMS	4	1.00
BATHROOMS	2	1.00
FIXTURES	9	1.00
GARAGE CAPACITY	1	1.00
% BSMT FINISH	0	1.00
# OF HALF BATHS	0	1.00
# OF UNITS	1	1.00

ELEMENT	CD	DESCRIPTION	ADJ
FOUNDATION	4	FLR/WALL(FULL)	1.00
EXT COVER	1	WOOD SHINGLE	1.02
ROOF SHAPE	1	GABLE	1.00
ROOF COVER	1	ASPH/COMP SHIN	1.00
FLOOR COVER	1	HARDWOOD	1.02
INT. FINISH	1	PLASTER	1.00
HEATING/COOLING	2	HOT WATER	1.02
FUEL SOURCE	1	OIL	1.00
USE	0		1.00

S	BAT	T	DESCRIPTION	UNITS	YB	ADJ PRICE	RCN
A	EPA	N	ENCLOSED PORCH	210		76.79	16,126
B	PTA	N	PATIO	270		16.00	4,321
C	BMU	N	BSMT UNFINISHED	875		42.93	37,560
C	BAS	L	BASE AREA	875	1900	233.43	204,255
C	USF	L	UPPER STORY FIN	656	1900	126.72	83,130
D	ENT	N	ENCLOSED ENTRY	40		99.50	3,980
E	BIG	N	BUILT-IN GARAGE	240		104.23	25,015
E	USF	L	UPPER STORY FIN	180	1989	126.72	22,810
F	AGR	N	ATT GARAGE	170		100.91	17,155
G	OPA	N	OPEN PORCH	280		69.28	19,398
	F21	O	FPL 2S 1OP	2		10,369.55	20,739
	FIX	O	XTRA FIXTURES	4		2,506.75	10,027

TOTAL RCN	464,515

CONDITION ELEM	CD
EXTERIOR	G
INTERIOR	A
KITCHEN	A
BATHS	A
HEAT	U
ELECT	A

EFF.YR/AGE	2001 / 21	
COND	18	18 %
FUNC	0	
ECON	0	
DEPR	18	% GD 82
RCNLD		$380,900