Key: 7862

Town of Bourne - Fiscal Year 2024

12/18/2023 6:02 pm SEQ #: 8,023

LEGAL

CURRENT OWNER	PARCEL ID	LOCATION
MYERS PHYLLIS B & DONALD I TRS OF PB & DI MYERS REV TR 1/2 EA PO BOX 388 POCASSET, MA 02559	38.1-47-0	50 POCAHONTAS RD

TRANSFER HISTORY	DOS	T	SALE PRICE	BK-PG (Cert)
MYERS PHYLLIS B & DONALD	02/04/2008	F	1	22648-133
MYERS PHYLLIS B & DONALD	04/29/1993	F	1	8546-285

CLASS	CLASS%	DESCRIPTION	BN ID	BN	CARD
1010	100	SINGLE FAMILY		1	1 of 1

PMT NO	PMT DT	TY	DESC	AMOUNT	INSP	BY	1st	%
EXB-21-464	07/07/2021	15	INSULATE/WEA	4,519			100	100
16281	04/19/2016	3	ALT/RENO	11,500	04/12/2017	TL	100	100
200532	08/28/2000	4	DETACH.STRUC	1,500	10/30/2000	TL	100	100
990272	05/24/1999	4	DETACH.STRUC	1,600	11/19/1999	MS	100	100
950559	11/01/1995	2	ADDITIONS	9,550	07/15/1996	JC	100	100

LAND

CD	T	AC/SF/UN	Nbhd	Infl1	N_Index	ADJ BASE	SAF	Topo	Lpi	VC	CREDIT AMT	ADJ VALUE
100	S	13,022	11 1.00	100 1.00	100 1.00	377,120	2.47	A 1.00	BAV 1.60			278,500

TOTAL	13,024 SF	ZONING	1	FRNT	0

Nbhd	POC
Infl1	AVG
N_Index	AVG

NOTE

ASSESSED	CURRENT	PREVIOUS
LAND	278,500	246,500
BUILDING	326,400	288,900
DETACHED	3,800	3,600
OTHER	0	0
TOTAL	**608,700**	**539,000**

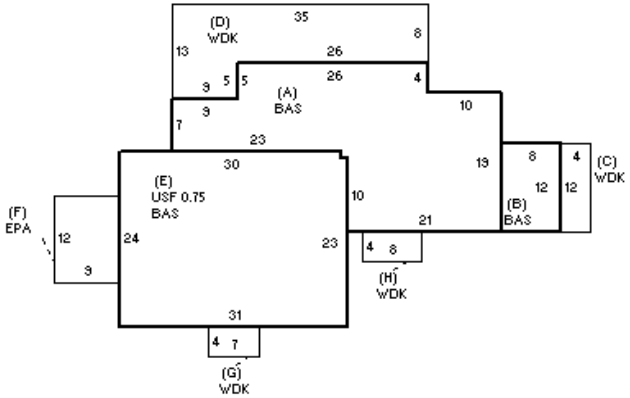

DETACHED

TY	QUAL	COND	DIM/NOTE	YB	UNITS	ADJ PRICE	RCNLD
SHF	A 1.00	A 0.75	10 X 16		160	15.95	1,900
GZB	A 1.00	A 0.75	8 X 12		96	26.50	1,900
SHF	A 1.00	A 0.75	8 X 10			0.00	

PHOTO 07/07/2017

BLDG COMMENTS

BUILDING

BUILDING	CD	ADJ	DESC
MODEL	1		RESIDENTIAL
STYLE	4	1.05	CAPE [100%]
QUALITY	A	1.00	AVERAGE [100%]
FRAME	1	1.00	WOOD FRAME [100%]

MEASURE	10/30/2000	TL
LIST	10/30/2000	TL
REVIEW	10/30/2000	TL

YEAR BLT	1929	SIZE ADJ	1.005
NET AREA	2,083	DETAIL ADJ	1.000
$NLA(RCN)	$206	OVERALL	1.110

CAPACITY	UNITS	ADJ
STORIES	1.75	1.00
ROOMS	10	1.00
BEDROOMS	4	1.00
BATHROOMS	2	1.00
FIXTURES	11	1.00
GARAGE CAPACITY	0	1.00
% BSMT FINISH	0	1.00
# OF HALF BATHS	1	1.00
# OF UNITS	1	1.00

ELEMENT	CD	DESCRIPTION	ADJ
FOUNDATION	3	FOUN. WALL	1.00
EXT COVER	1	WOOD SHINGLE	1.02
ROOF SHAPE	1	GABLE	1.00
ROOF COVER	1	ASPH/COMP SHIN	1.00
FLOOR COVER	1	HARDWOOD	1.02
INT. FINISH	1	PLASTER	1.00
HEATING/COOLING	2	HOT WATER	1.02
FUEL SOURCE	2	GAS	1.00
USE	0		1.00

S	BAT	T	DESCRIPTION	UNITS	YB	ADJ PRICE	RCN
+	BAS	L	BASE AREA	1,526	1929	204.65	312,299
+	WDK	N	WOOD DECK	433		23.83	10,318
E	USF	L	UPPER STORY FIN	557	1929	122.75	68,370
F	EPA	N	ENCLOSED PORCH	108		91.78	9,912
	F21	O	FPL 2S 1OP	1		9,826.90	9,827
	FIX	O	XTRA FIXTURES	6		2,375.75	14,255
	MST	O	MAS/METAL STACK	1		4,452.20	4,452

TOTAL RCN	429,432

CONDITION ELEM	CD
EXTERIOR	A
INTERIOR	A
KITCHEN	A
BATHS	A
HEAT	A
ELECT	A

EFF.YR/AGE	1995 / 27		
COND	24	24 %	
FUNC	0		
ECON	0		
DEPR	24	% GD	76
RCNLD			$326,400