Key: 7876

Town of Bourne - Fiscal Year 2024

12/18/2023 6:02 pm SEQ #: 8,038

LEGAL

CURRENT OWNER	PARCEL ID	LOCATION
CALLOE MARY A **34 EMILY RD** **FRAMINGHAM, MA 01701**	**38.2-4-0**	**7 BENNETS NECK DR**

TRANSFER HISTORY	DOS	T	SALE PRICE	BK-PG (Cert)
CALLOE MARY A	01/14/2013	QS	355,000	(199420)
ABSOLUTE BUILDING CONSULT	10/02/2012	P	110,000	(198351)
MCLAUGHLIN JOHN W	06/18/2009	U	80,000	(188824)

CLASS	CLASS%	DESCRIPTION	BN ID	BN	CARD
1010	**100**	**SINGLE FAMILY**		**1**	**1 of 1**

PMT NO	PMT DT	TY	DESC	AMOUNT	INSP	BY	1st	%
		12	CYCLICAL		06/14/2016	TL	100	100
12872	12/12/2012	2	ADDITIONS	35,000	10/07/2013	TL	100	100
12878	12/12/2012	9	DECK	4,000	10/07/2013	TL	100	100
12692	09/27/2012	1	NEW CONSTRUC	107,000	10/07/2013	TL	100	100
03529	08/05/2003	1	NEW CONSTRUC	120,000	09/20/2005	TL	100	100

LAND

CD	T	AC/SF/UN	Nbhd	Infl1	N_Index	ADJ BASE	SAF	Topo	Lpi	VC	CREDIT AMT	ADJ VALUE
100	S	19,310	11 1.00	100 1.00	100 1.00	271,055	1.76	A 1.00	R07 1.15			211,510

TOTAL	19,297 SF	ZONING	1	FRNT	0
Nbhd	POC	NOTE	ALSO OWNS CONTIGUOUS PCL 11 WHICH DOESN'T HAVE ANY ACCESS EXCEPT THROUGH THIS PCL; THIS PCL 11 IS UNBUILDABLE		
Infl1	AVG				
N_Index	AVG				

ASSESSED	CURRENT	PREVIOUS
LAND	211,500	179,100
BUILDING	437,800	390,100
DETACHED	0	0
OTHER	0	0
TOTAL	**649,300**	**569,200**

DETACHED

TY	QUAL	COND	DIM/NOTE	YB	UNITS	ADJ PRICE	RCNLD

PHOTO 08/21/2023

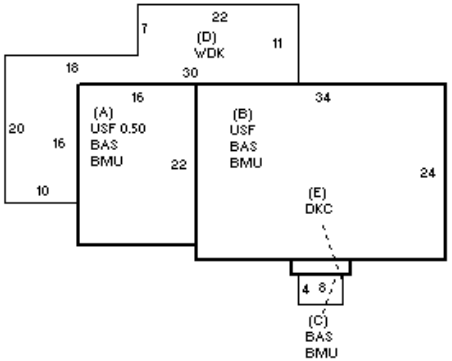

BLDG COMMENTS

BUILDING

BUILDING	CD	ADJ	DESC
MODEL	1		RESIDENTIAL
STYLE	5	1.00	COLONIAL [100%]
QUALITY	+	1.05	AVERAGE + [100%]
FRAME	1	1.00	WOOD FRAME [100%]

MEASURE	8/21/2023	SL
LIST	8/21/2023	EST
REVIEW	8/21/2023	SL

YEAR BLT	2012	SIZE ADJ	1.005
NET AREA	2,176	DETAIL ADJ	1.000
$NLA(RCN)	$214	OVERALL	1.050

CAPACITY	UNITS	ADJ
STORIES	2	1.00
ROOMS	7	1.00
BEDROOMS	4	1.00
BATHROOMS	2	1.00
FIXTURES	11	1.00
GARAGE CAPACITY	0	1.00
% BSMT FINISH	0	1.00
# OF HALF BATHS	1	1.00
# OF UNITS	1	1.00

ELEMENT	CD	DESCRIPTION	ADJ
FOUNDATION	4	FLR/WALL(FULL)	1.00
EXT COVER	4	VINYL	1.00
ROOF SHAPE	1	GABLE	1.00
ROOF COVER	1	ASPH/COMP SHIN	1.00
FLOOR COVER	1	HARDWOOD	1.02
INT. FINISH	2	DRYWALL	1.00
HEATING/COOLING	9	WARM-COOL AIR	1.03
FUEL SOURCE	2	GAS	1.00
USE	0		1.00

S	BAT	T	DESCRIPTION	UNITS	YB	ADJ PRICE	RCN
+	BMU	N	BSMT UNFINISHED	1,184		40.40	47,837
A	BAS	L	BASE AREA	352	2013	212.70	74,871
A	USF	L	UPPER STORY FIN	176	2013	119.28	20,992
+	BAS	L	BASE AREA	832	2012	212.70	176,967
B	USF	L	UPPER STORY FIN	816	2012	119.28	97,331
D	WDK	N	WOOD DECK	474		23.67	11,219
E	DKC	N	DECK-COMPOSITE	24		69.58	1,670
	FIX	O	XTRA FIXTURES	6		2,359.70	14,158
	GFP	O	GAS FIREPLACE	1		7,091.30	7,091
	JAC	O	JACUZZI	1		13,606.40	13,606

TOTAL RCN	465,743

CONDITION ELEM	CD
EXTERIOR	A
INTERIOR	A
KITCHEN	A
BATHS	A
HEAT	A
ELECT	A

EFF.YR/AGE	2013 / 9	
COND	6 6 %	
FUNC	0	
ECON	0	
DEPR	6	% GD 94
RCNLD		$437,800