Key: 793

Town of Bourne - Fiscal Year 2024

12/18/2023 6:02 pm SEQ #: 794

LEGAL

CURRENT OWNER	PARCEL ID	LOCATION
TRAUB TIMOTHY T & JANET L MCGREGOR TR 25 PHILLIPS RD 7 AUNT POLLYS LANE ORLEANS, MA 02653-4133	4.4-47-0	25 PHILLIPS RD

TRANSFER HISTORY	DOS	T	SALE PRICE	BK-PG (Cert)
TRAUB TIMOTHY T & JANET L	07/25/2011	F		25583-45
JARDINE JANET A & MARION	12/29/1995	XX		9995-137

CLASS	CLASS%	DESCRIPTION	BN ID	BN	CARD
1010	100	SINGLE FAMILY		1	1 of 1

PMT NO	PMT DT	TY	DESC	AMOUNT	INSP	BY	1st	%
10299	06/03/2010	3	ALT/RENO	30,000	05/29/2018	TL	100	100
07458	08/02/2007	3	ALT/RENO	5,000	10/01/2008	TL	100	100

LAND

CD	T	AC/SF/UN	Nbhd	Infl1	N_Index	ADJ BASE	SAF	Topo	Lpi	VC	CREDIT AMT	ADJ VALUE
100	S	22,321	1 1.00	100 1.00	100 1.00	1,555,620	1.56	A 1.00	BSP 6.60			1,245,120

TOTAL	22,303 SF	ZONING	1	FRNT	115

Nbhd	N SAG
Infl1	AVG
N_Index	AVG

NOTE: Great views; steps down to sandy beach

ASSESSED	CURRENT	PREVIOUS
LAND	1,245,100	1,102,000
BUILDING	432,500	382,700
DETACHED	0	0
OTHER	0	0
TOTAL	**1,677,600**	**1,484,700**

DETACHED

TY	QUAL	COND	DIM/NOTE	YB	UNITS	ADJ PRICE	RCNLD

PHOTO 01/31/2018

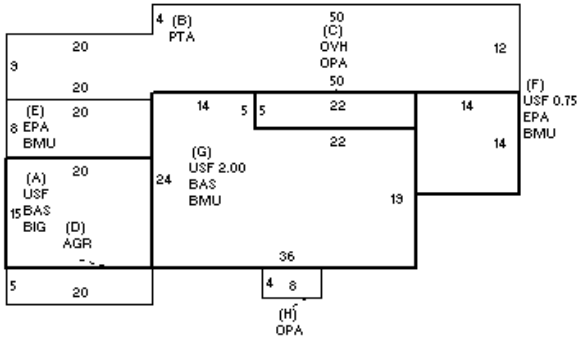

BLDG COMMENTS

BUILDING

BUILDING	CD	ADJ	DESC
MODEL	1		RESIDENTIAL
STYLE	7	1.00	CONVENTIONAL [100%]
QUALITY	A	1.00	AVERAGE [100%]
FRAME	1	1.00	WOOD FRAME [100%]

MEASURE	1/3/2022	NMP
LIST	7/2/2018	BC
REVIEW	7/2/2018	BC

YEAR BLT	1926	SIZE ADJ	0.995
NET AREA	3,119	DETAIL ADJ	1.000
$NLA(RCN)	$182	OVERALL	1.010

CAPACITY	UNITS	ADJ
STORIES	3	1.00
ROOMS	10	1.00
BEDROOMS	5	1.00
BATHROOMS	2	1.00
FIXTURES	11	1.00
GARAGE CAPACITY	2	1.00
% BSMT FINISH	0	1.00
# OF HALF BATHS	1	1.00
# OF UNITS	1	1.00

ELEMENT	CD	DESCRIPTION	ADJ
FOUNDATION	4	FLR/WALL(FULL)	1.00
EXT COVER	1	WOOD SHINGLE	1.02
ROOF SHAPE	1	GABLE	1.00
ROOF COVER	1	ASPH/COMP SHIN	1.00
FLOOR COVER	2	SOFTWOOD	1.02
INT. FINISH	3	WOOD PANEL	0.98
HEATING/COOLING	14	PARTIAL HEAT	0.99
FUEL SOURCE	2	GAS	1.00
USE	0		1.00

S	BAT	T	DESCRIPTION	UNITS	YB	ADJ PRICE	RCN
A	BIG	N	BUILT-IN GARAGE	300		88.98	26,695
+	BAS	L	BASE AREA	1,054	1926	192.92	203,334
+	USF	L	UPPER STORY FIN	1,955	1926	104.48	204,263
B	PTA	N	PATIO	780		13.66	10,659
+	OPA	N	OPEN PORCH	142		68.95	9,791
C	OVH	L	OVERHANG	110	1926	182.00	20,020
D	AGR	N	ATT GARAGE	100		86.14	8,614
+	BMU	N	BSMT UNFINISHED	1,110		36.65	40,676
+	EPA	N	ENCLOSED PORCH	356		65.56	23,338
	F21	O	FPL 2S 1OP	1		8,852.60	8,853
	FIX	O	XTRA FIXTURES	6		2,140.22	12,841

TOTAL RCN	569,083

CONDITION ELEM	CD
EXTERIOR	A
INTERIOR	A
KITCHEN	A
BATHS	A
HEAT	A
ELECT	A

EFF.YR/AGE	1995 / 27		
COND	24	24 %	
FUNC	0		
ECON	0		
DEPR	24	% GD	76
RCNLD			$432,500