Key: 8080

Town of Bourne - Fiscal Year 2024

12/18/2023 6:02 pm SEQ #: 8,245

LEGAL

CURRENT OWNER	PARCEL ID	LOCATION
ROSSINI JACQUELINE & JOSEPH 190 WINTER STREET HOLLISTON, MA 01746	38.3-100-0	10 FAIRVIEW RD

TRANSFER HISTORY	DOS	T	SALE PRICE	BK-PG (Cert)
ROSSINI JACQUELINE & JOSE	03/23/2018	H	345,000	31154-18
COLLINS BEVERLY A	02/03/2005	F		19499-137
COLLINS ROBERT C &		XX		01306-1009

CLASS	CLASS%	DESCRIPTION	BN ID	BN	CARD
1010	100	SINGLE FAMILY		1	1 of 1

PMT NO	PMT DT	TY	DESC	AMOUNT	INSP	BY	1st	%
18227	03/29/2018	3	ALT/RENO	12,000			100	100
03726	10/07/2003	9	DECK		09/19/2006	TL	100	100
03518	08/01/2003	2	ADDITIONS	4,000	01/07/2004	TL	100	100
910532	11/08/1991	3	ALT/RENO	600	02/01/1992	HS	100	100
890444	07/19/1989	9	DECK	900	01/23/1990	HLD	100	100

LAND

CD	T	AC/SF/UN	Nbhd	Infl1	N_Index	ADJ BASE	SAF	Topo	Lpi	VC	CREDIT AMT	ADJ VALUE
100	S	7,200	11 1.00	100 1.00	100 1.00	589,250	4.23	A 1.00	BA+ 2.50			412,310

TOTAL	7,187 SF	ZONING	1	FRNT	0
Nbhd	POC	NOTE			
Infl1	AVG				
N_Index	AVG				

ASSESSED	CURRENT	PREVIOUS
LAND	412,300	321,100
BUILDING	262,600	232,400
DETACHED	0	0
OTHER	0	0
TOTAL	**674,900**	**553,500**

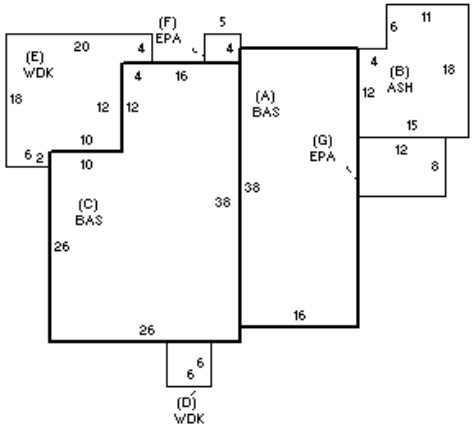

DETACHED

TY	QUAL	COND	DIM/NOTE	YB	UNITS	ADJ PRICE	RCNLD

PHOTO 01/08/2004

BLDG COMMENTS

BUILDING

BUILDING	CD	ADJ	DESC
MODEL	1		RESIDENTIAL
STYLE	1	0.95	RANCH [100%]
QUALITY	A	1.00	AVERAGE [100%]
FRAME	1	1.00	WOOD FRAME [100%]

MEASURE	11/1/2023	SL
LIST	11/1/2023	EST
REVIEW	11/1/2023	SL

YEAR BLT	1920	SIZE ADJ	1.015
NET AREA	1,476	DETAIL ADJ	1.000
$NLA(RCN)	$212	OVERALL	1.010

CAPACITY	UNITS	ADJ
STORIES	1	1.00
ROOMS	4	1.00
BEDROOMS	2	1.00
BATHROOMS	2	1.00
FIXTURES	9	1.00
GARAGE CAPACITY	0	1.00
% BSMT FINISH	0	1.00
# OF HALF BATHS	0	1.00
# OF UNITS	1	1.00

ELEMENT	CD	DESCRIPTION	ADJ
FOUNDATION	3	FOUN. WALL	1.00
EXT COVER	1	WOOD SHINGLE	1.02
ROOF SHAPE	1	GABLE	1.00
ROOF COVER	1	ASPH/COMP SHIN	1.00
FLOOR COVER	2	SOFTWOOD	1.02
INT. FINISH	2	DRYWALL	1.00
HEATING/COOLING	2	HOT WATER	1.02
FUEL SOURCE	2	GAS	1.00
USE	0		1.00

S	BAT	T	DESCRIPTION	UNITS	YB	ADJ PRICE	RCN
+	BAS	L	BASE AREA	1,476	1920	188.07	277,589
B	ASH	N	ATT SHED	246		22.04	5,423
+	WDK	N	WOOD DECK	320		21.90	7,007
+	EPA	N	ENCLOSED PORCH	116		84.34	9,783
	FIX	O	XTRA FIXTURES	4		2,183.05	8,732
	MST	O	MAS/METAL STACK	1		4,091.40	4,091

TOTAL RCN	312,626
CONDITION ELEM	CD
EXTERIOR	A
INTERIOR	A
KITCHEN	G
BATHS	G
HEAT	A
ELECT	U

EFF.YR/AGE	2003 / 19	
COND	16	16 %
FUNC	0	
ECON	0	
DEPR	16	% GD 84
RCNLD		$262,600