Key: 8161

Town of Bourne - Fiscal Year 2024

12/18/2023 6:02 pm SEQ #: 8,323

LEGAL

CURRENT OWNER	PARCEL ID	LOCATION
MAYHEW CHARLES S & PHYLLIS G MAYHEW PO BOX 161 POCASSET, MA 02559	38.3-191-0	67 WINGS NECK RD

TRANSFER HISTORY	DOS	T	SALE PRICE	BK-PG (Cert)
MAYHEW CHARLES S &	06/01/2005	QS	355,000	()
HOKANSON CHARLES ETUX	08/25/2003	QS	251,500	17522-43
KEIGHLEY ROBERT E &		XX		2383-94

CLASS	CLASS%	DESCRIPTION	BN ID	BN	CARD
1010	100	SINGLE FAMILY		1	1 of 1

PMT NO	PMT DT	TY	DESC	AMOUNT	INSP	BY	1st	%
EXB-22-656	10/03/2022	14	SOLAR	43,781			100	100
EXB-22-604	09/13/2022	3	ALT/RENO	7,800			100	100
07386	07/03/2007	2	ADDITIONS	40,000	10/23/2008	DB	100	100

LAND

CD	T	AC/SF/UN	Nbhd	Infl1	N_Index	ADJ BASE	SAF	Topo	Lpi	VC	CREDIT AMT	ADJ VALUE
100	S	8,600	11 1.00	100 1.00	100 1.00	589,250	3.59	A 1.00	BA+ 2.50			417,790

TOTAL	8,600 SF	ZONING	1	FRNT	0

Nbhd	POC
Infl1	AVG
N_Index	AVG

NOTE: Marshview; deeded beach rights

ASSESSED	CURRENT	PREVIOUS
LAND	417,800	325,400
BUILDING	207,600	183,700
DETACHED	0	0
OTHER	0	0
TOTAL	**625,400**	**509,100**

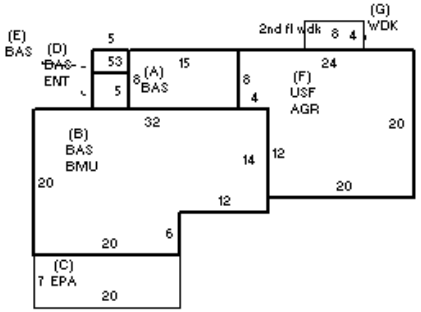

DETACHED

TY	QUAL	COND	DIM/NOTE	YB	UNITS	ADJ PRICE	RCNLD

PHOTO 12/31/2002

BLDG COMMENTS

BUILDING

BUILDING	CD	ADJ	DESC
MODEL	1		RESIDENTIAL
STYLE	1	0.92	RANCH [86%]
QUALITY	A	1.00	AVERAGE [100%]
FRAME	1	1.00	WOOD FRAME [100%]

MEASURE	5/11/2007	TL
LIST	5/11/2007	TL
REVIEW	10/24/2008	DB

YEAR BLT	1945	SIZE ADJ	1.015
NET AREA	1,160	DETAIL ADJ	1.000
$NLA(RCN)	$216	OVERALL	0.896

CAPACITY	UNITS	ADJ
STORIES	1	1.00
ROOMS	4	1.00
BEDROOMS	1	1.00
BATHROOMS	1	1.00
FIXTURES	5	1.00
GARAGE CAPACITY	0	1.00
% BSMT FINISH	0	1.00
# OF HALF BATHS	0	1.00
# OF UNITS	1	1.00

ELEMENT	CD	DESCRIPTION	ADJ
FOUNDATION	3	FOUN. WALL	1.00
EXT COVER	1	WOOD SHINGLE	1.02
ROOF SHAPE	1	GABLE	1.00
ROOF COVER	1	ASPH/COMP SHIN	1.00
FLOOR COVER	3	W/W CARPET	1.00
INT. FINISH	3	WOOD PANEL	0.98
HEATING/COOLING	5	ELECTRIC BB	0.98
FUEL SOURCE	2	GAS	1.00
USE	0		1.00

S	BAT	T	DESCRIPTION	UNITS	YB	ADJ PRICE	RCN
+	BAS	L	BASE AREA	160	1945	187.60	30,015
B	BMU	N	BSMT UNFINISHED	568		41.86	23,778
B	BAS	L	BASE AREA	568	1945	187.59	106,553
C	EPA	N	ENCLOSED PORCH	140		74.82	10,475
D	ENT	N	ENCLOSED ENTRY	25		103.86	2,597
F	AGR	N	ATT GARAGE	432		56.21	24,282
F	USF	L	UPPER STORY FIN	432	2007	100.07	43,229
G	WDK	N	WOOD DECK	32		57.63	1,844
	F11	O	FPL 1S 1OP	1		7,291.90	7,292

TOTAL RCN	250,065

CONDITION ELEM	CD
EXTERIOR	A
INTERIOR	A
KITCHEN	A
BATHS	G
HEAT	A
ELECT	A

EFF.YR/AGE	2002 / 20	
COND	17	17 %
FUNC	0	
ECON	0	
DEPR	17	% GD 83
RCNLD		$207,600