Key: **820**

Town of Bourne - Fiscal Year 2024

12/18/2023 6:02 pm SEQ #: 819

LEGAL

CURRENT OWNER	PARCEL ID	LOCATION
ELLIS LYNNE ETALS TRS OF SAGAMORE BEACH REALTY TRUST C/O TOM KEERY PO BOX 10 NEWTOWN, MA 02456	4.4-72-0	85 PHILLIPS RD

TRANSFER HISTORY	DOS	T	SALE PRICE	BK-PG (Cert)
ELLIS LYNNE ETALS TRS OF	01/05/1996	XX		10003-88

CLASS	CLASS%	DESCRIPTION	BN ID	BN	CARD
1010	100	SINGLE FAMILY		1	1 of 1

PMT NO	PMT DT	TY	DESC	AMOUNT	INSP	BY	1st	%
05011	01/06/2005	2	ADDITIONS	80,000	09/18/2006	DB	100	100

LAND

CD	T	AC/SF/UN	Nbhd	Infl1	N_Index	ADJ BASE	SAF	Topo	Lpi	VC	CREDIT AMT	ADJ VALUE
100	S	6,310	1 1.00	100 1.00	100 1.00	1,555,620	4.79	A 1.00	BSP 6.60			1,079,280

TOTAL	6,316 SF	ZONING	1	FRNT	60
Nbhd	N SAG	NOTE			
Infl1	AVG				
N_Index	AVG				

ASSESSED	CURRENT	PREVIOUS
LAND	1,079,300	955,200
BUILDING	328,000	290,300
DETACHED	0	0
OTHER	0	0
TOTAL	**1,407,300**	**1,245,500**

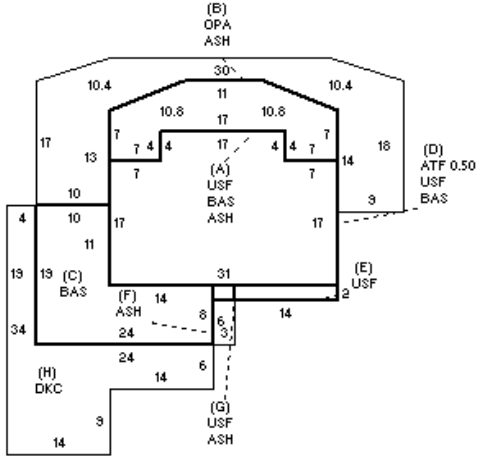

DETACHED

TY	QUAL	COND	DIM/NOTE	YB	UNITS	ADJ PRICE	RCNLD

PHOTO 02/09/2018

BLDG COMMENTS

BUILDING

BUILDING	CD	ADJ	DESC
MODEL	1		RESIDENTIAL
STYLE	7	1.00	CONVENTIONAL [100%]
QUALITY	+	1.05	AVERAGE + [100%]
FRAME	1	1.00	WOOD FRAME [100%]

MEASURE	1/3/2022	NMP
LIST	2/9/2018	EST
REVIEW	12/31/2018	DB

YEAR BLT	1910	SIZE ADJ	1.010
NET AREA	1,992	DETAIL ADJ	1.000
$NLA(RCN)	$211	OVERALL	0.950

CAPACITY	UNITS	ADJ
STORIES	2	1.00
ROOMS	7	1.00
BEDROOMS	5	1.00
BATHROOMS	2	1.00
FIXTURES	11	1.00
GARAGE CAPACITY	0	1.00
% BSMT FINISH	0	1.00
# OF HALF BATHS	1	1.00
# OF UNITS	1	1.00

ELEMENT	CD	DESCRIPTION	ADJ
FOUNDATION	2	SLAB	0.95
EXT COVER	1	WOOD SHINGLE	1.02
ROOF SHAPE	1	GABLE	1.00
ROOF COVER	1	ASPH/COMP SHIN	1.00
FLOOR COVER	1	HARDWOOD	1.02
INT. FINISH	3	WOOD PANEL	0.98
HEATING/COOLING	5	ELECTRIC BB	0.98
FUEL SOURCE	3	ELECTRIC	1.00
USE	0		1.00

S	BAT	T	DESCRIPTION	UNITS	YB	ADJ PRICE	RCN
A	ASH	N	ATT SHED	233		21.66	5,047
B	ASH	N	ATT SHED	492		19.97	9,826
B	OPA	N	OPEN PORCH	492		59.29	29,171
+	BAS	L	BASE AREA	1,130	1910	193.40	218,544
D	ATF	N	ATTIC FINISH	298		62.54	18,637
+	USF	L	UPPER STORY FIN	862	1910	108.45	93,488
F	ASH	N	ATT SHED	18		25.07	451
G	ASH	N	ATT SHED	6		25.02	150
H	DKC	N	DECK-COMPOSITE	370		63.26	23,406
	F21	O	FPL 2S 1OP	1		8,874.80	8,875
	FIX	O	XTRA FIXTURES	6		2,145.58	12,874

TOTAL RCN	420,469

CONDITION ELEM	CD
EXTERIOR	A
INTERIOR	A
KITCHEN	G
BATHS	A
HEAT	A
ELECT	A

EFF.YR/AGE	1997 / 25		
COND	22	22 %	
FUNC	0		
ECON	0		
DEPR	22	% GD	78
RCNLD			$328,000