Key: 8389

Town of Bourne - Fiscal Year 2024

12/18/2023 6:02 pm SEQ #: 8,552

LEGAL

CURRENT OWNER	PARCEL ID	LOCATION
SOLOMON MARC & CYNTHIA SOLOMON PO BOX 966 POCASSET, MA 02559-0966	38.4-54-0	14 ELLEN LN

TRANSFER HISTORY	DOS	T	SALE PRICE	BK-PG (Cert)
SOLOMON MARC &		XX		03931-0329

CLASS	CLASS%	DESCRIPTION	BN ID	BN	CARD
1010	100	SINGLE FAMILY		1	1 of 1

PMT NO	PMT DT	TY	DESC	AMOUNT	INSP	BY	1st	%
EXB-23-513	08/09/2023	3	ALT/RENO	25,300	10/20/2023	SL	100	100
16333	05/02/2016	10	WOODSTOVE	2,700	07/19/2016		100	100
960104	04/01/1996	2	ADDITIONS	18,000	09/24/1997	PAM	100	100

LAND

CD	T	AC/SF/UN	Nbhd	Infl1	N_Index	ADJ BASE	SAF	Topo	Lpi	VC	CREDIT AMT	ADJ VALUE
100	S	24,810	11 1.00	100 1.00	100 1.00	424,260	1.43	A 1.00	R09 1.80			346,610

TOTAL	24,829 SF	ZONING	1	FRNT	0

Nbhd	POC
Infl1	AVG
N_Index	AVG

NOTE

ASSESSED	CURRENT	PREVIOUS
LAND	346,600	281,200
BUILDING	459,300	423,300
DETACHED	0	0
OTHER	0	0
TOTAL	**805,900**	**704,500**

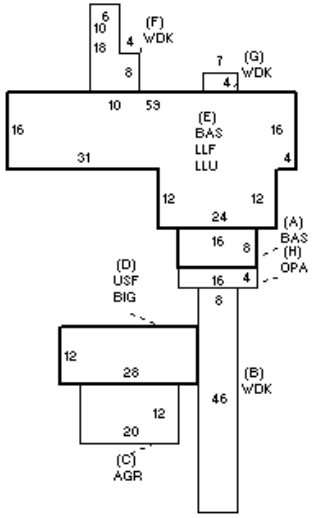

DETACHED

TY	QUAL	COND	DIM/NOTE	YB	UNITS	ADJ PRICE	RCNLD

PHOTO 08/28/2008

BLDG COMMENTS

BUILDING

BUILDING	CD	ADJ	DESC
MODEL	1		RESIDENTIAL
STYLE	8	1.10	CONTEMPORARY [100%]
QUALITY	G	1.10	GOOD [100%]
FRAME	1	1.00	WOOD FRAME [100%]

MEASURE	10/20/2023	SL
LIST	10/20/2023	SL
REVIEW	10/20/2023	SL

YEAR BLT	1985	SIZE ADJ	1.000
NET AREA	2,928	DETAIL ADJ	1.000
$NLA(RCN)	$201	OVERALL	1.120

CAPACITY	UNITS	ADJ
STORIES	1	1.00
ROOMS	6	1.00
BEDROOMS	3	1.00
BATHROOMS	2	1.00
FIXTURES	12	1.00
GARAGE CAPACITY	2	1.00
% BSMT FINISH	100	1.00
# OF HALF BATHS	1	1.00
# OF UNITS	1	1.00

ELEMENT	CD	DESCRIPTION	ADJ
FOUNDATION	4	FLR/WALL(FULL)	1.00
EXT COVER	10	VERT BOARD	1.00
ROOF SHAPE	1	GABLE	1.00
ROOF COVER	1	ASPH/COMP SHIN	1.00
FLOOR COVER	13	HARDWOOD-W/W	1.00
INT. FINISH	2	DRYWALL	1.00
HEATING/COOLING	2	HOT WATER	1.02
FUEL SOURCE	1	OIL	1.00
USE	0		1.00

S	BAT	T	DESCRIPTION	UNITS	YB	ADJ PRICE	RCN
+	BAS	L	BASE AREA	1,360	1985	231.59	314,967
+	WDK	N	WOOD DECK	536		26.32	14,105
C	AGR	N	ATT GARAGE	240		85.99	20,637
D	BIG	N	BUILT-IN GARAGE	336		109.08	36,652
D	USF	L	UPPER STORY FIN	336	1985	135.56	45,548
E	LLU	N	LOWER LEVEL UNF	1,232		38.32	47,213
E	LLF	L	LOWER LEVEL FIN	1,232	1985	65.22	80,349
H	OPA	N	OPEN PORCH	64		94.42	6,043
	FIX	O	XTRA FIXTURES	7		2,623.63	18,365
	MST	O	MAS/METAL STACK	1		4,916.90	4,917

TOTAL RCN	588,796

CONDITION ELEM	CD
EXTERIOR	A
INTERIOR	A
KITCHEN	A
BATHS	A
HEAT	A
ELECT	A

EFF.YR/AGE	1997 / 25		
COND	22	22 %	
FUNC	0		
ECON	0		
DEPR	22	% GD	78
RCNLD			$459,300