Key: 843

Town of Bourne - Fiscal Year 2024

12/18/2023 6:02 pm SEQ #: 841

LEGAL

CURRENT OWNER	PARCEL ID	LOCATION
MILLER ROGER A REV TRUST PO BOX 275 SAGAMORE BEACH, MA 02562-0275	4.4-102-0	156 STANDISH RD

TRANSFER HISTORY	DOS	T	SALE PRICE	BK-PG (Cert)
MILLER ROGER A REV TRUST	01/16/2013	F	1	27045-150
MILLER ROGER A &	06/06/1978	X		2721-160

CLASS	CLASS%	DESCRIPTION	BN ID	BN	CARD
1010	100	SINGLE FAMILY		1	1 of 1

PMT NO	PMT DT	TY	DESC	AMOUNT	INSP	BY	1st	%
16260	04/12/2016	3	ALT/RENO	8,000			100	100
950205	05/04/1995	4	DETACH.STRUC	700	07/24/1996	JS	100	100
920195	04/29/1992	3	ALT/RENO	500	05/31/1995	JC	100	100
900182	04/26/1990	2	ADDITIONS	75,000	02/09/1993	JS	100	100

LAND

CD	T	AC/SF/UN	Nbhd	Infl1	N_Index	ADJ BASE	SAF	Topo	Lpi	VC	CREDIT AMT	ADJ VALUE
100	S	7,070	1 1.00	100 1.00	100 1.00	388,905	4.31	A 1.00	BAV 1.65			271,790

TOTAL	7,057 SF	ZONING	1	FRNT	51
Nbhd	N SAG	NOTE			
Infl1	AVG				
N_Index	AVG				

ASSESSED	CURRENT	PREVIOUS
LAND	271,800	240,500
BUILDING	278,700	246,600
DETACHED	1,000	1,400
OTHER	0	0
TOTAL	**551,500**	**488,500**

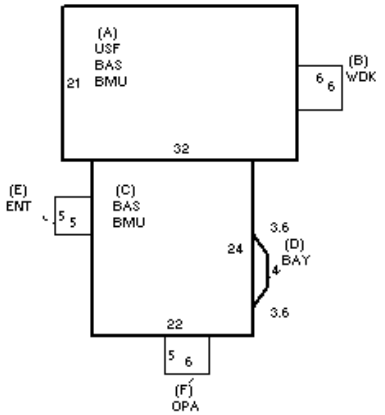

DETACHED

TY	QUAL	COND	DIM/NOTE	YB	UNITS	ADJ PRICE	RCNLD
SHF	A 1.00	50 0.50	9 X 12	1995	120	16.42	1,000

PHOTO 05/02/2002

BLDG COMMENTS

BUILDING

BUILDING	CD	ADJ	DESC
MODEL	1		RESIDENTIAL
STYLE	7	1.00	CONVENTIONAL [100%]
QUALITY	A	1.00	AVERAGE [100%]
FRAME	1	1.00	WOOD FRAME [100%]

MEASURE	1/13/2022	NMP
LIST	6/19/2020	EST
REVIEW	6/19/2020	RP

YEAR BLT	1953	SIZE ADJ	1.010
NET AREA	1,886	DETAIL ADJ	1.000
$NLA(RCN)	$200	OVERALL	1.020

CAPACITY	UNITS	ADJ
STORIES	2	1.00
ROOMS	7	1.00
BEDROOMS	3	1.00
BATHROOMS	1	1.00
FIXTURES	7	1.00
GARAGE CAPACITY	0	1.00
% BSMT FINISH	0	1.00
# OF HALF BATHS	1	1.00
# OF UNITS	1	1.00

ELEMENT	CD	DESCRIPTION	ADJ
FOUNDATION	4	FLR/WALL(FULL)	1.00
EXT COVER	1	WOOD SHINGLE	1.02
ROOF SHAPE	1	GABLE	1.00
ROOF COVER	1	ASPH/COMP SHIN	1.00
FLOOR COVER	35	W/W-VINYL	1.00
INT. FINISH	2	DRYWALL	1.00
HEATING/COOLING	1	FORCED AIR	1.00
FUEL SOURCE	2	GAS	1.00
USE	0		1.00

S	BAT	T	DESCRIPTION	UNITS	YB	ADJ PRICE	RCN
+	BMU	N	BSMT UNFINISHED	1,200		37.57	45,080
+	BAS	L	BASE AREA	1,200	1953	197.76	237,316
A	USF	L	UPPER STORY FIN	672	1953	112.02	75,276
B	WDK	N	WOOD DECK	36		65.30	2,351
D	BAY	L	BAYWINDOW	14	1953	186.54	2,612
E	ENT	N	ENCLOSED ENTRY	25		117.65	2,941
F	OPA	N	OPEN PORCH	30		83.93	2,518
	FIX	O	XTRA FIXTURES	2		2,193.80	4,388
	MST	O	MAS/METAL STACK	1		4,111.50	4,112

TOTAL RCN	376,592

CONDITION ELEM	CD
EXTERIOR	A
INTERIOR	A
KITCHEN	A
BATHS	A
HEAT	A
ELECT	O

EFF.YR/AGE	1993 / 29	
COND	26	26 %
FUNC	0	
ECON	0	
DEPR	26	% GD 74
RCNLD		$278,700