Key: **851**

Town of Bourne - Fiscal Year 2024

12/18/2023 6:02 pm SEQ #: 849

LEGAL

CURRENT OWNER	PARCEL ID	LOCATION
HIGGINS FREDERICK & **SANDRA HIGGINS** **316 WILLISTON RD** **SAGAMORE BEACH, MA 02562**	**4.4-114-0**	**316 WILLISTON RD**

TRANSFER HISTORY	DOS	T	SALE PRICE	BK-PG (Cert)
HIGGINS FREDERICK &	08/14/2020	QS	600,000	(223354)
CAFUA MICHAEL ETUX	05/22/2009	QS	470,000	(188617)
PENNEY ROBERT E AND	06/09/1998	QS	115,000	(148864)

CLASS	CLASS%	DESCRIPTION	BN ID	BN	CARD
1010	**100**	**SINGLE FAMILY**		**1**	**1 of 1**

PMT NO	PMT DT	TY	DESC	AMOUNT	INSP	BY	1st	%
16606	07/21/2016	4	DETACH.STRUC	10,000	04/09/2018	TL	100	100
01406	07/09/2003	8	POOL		08/06/2002	TL	100	100
02070	02/11/2002	2	ADDITIONS	22,500	08/06/2002	TL	100	100
		13	OTHER				100	100

LAND

CD	T	AC/SF/UN	Nbhd	Infl1	N_Index	ADJ BASE	SAF	Topo	Lpi	VC	CREDIT AMT	ADJ VALUE
100	S	12,000	1 1.00	100 1.00	100 1.00	388,905	2.66	A 1.00	BAV 1.65			284,550

TOTAL	12,023 SF	ZONING	1	FRNT	60

Nbhd	N SAG
Infl1	AVG
N_Index	AVG

NOTE: Also frontage on Mayflower

ASSESSED	CURRENT	PREVIOUS
LAND	284,600	251,800
BUILDING	496,900	439,700
DETACHED	24,000	22,900
OTHER	0	0
TOTAL	**805,500**	**714,400**

DETACHED

TY	QUAL	COND	DIM/NOTE	YB	UNITS	ADJ PRICE	RCNLD
SHF	G 1.20	A 0.75	8 X 12			0.00	
GFU	V 1.30	10 0.90	20 X 25	2016	500	53.43	24,000

PHOTO 02/05/2018

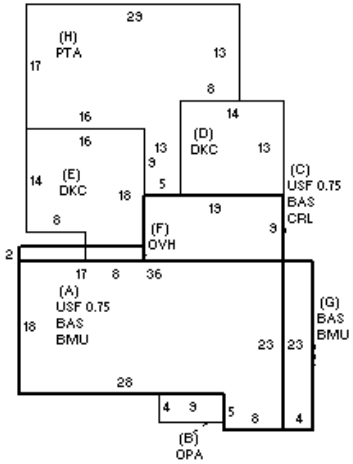

BLDG COMMENTS

BUILDING

BUILDING	CD	ADJ	DESC
MODEL	1		RESIDENTIAL
STYLE	8	1.10	CONTEMPORARY [100%]
QUALITY	V	1.35	VERY GOOD [100%]
FRAME	1	1.00	WOOD FRAME [100%]

MEASURE	1/21/2022	NMP
LIST	2/18/2018	BC
REVIEW	5/17/2021	RP

YEAR BLT	1953	SIZE ADJ	1.010
NET AREA	1,629	DETAIL ADJ	1.000
$NLA(RCN)	$377	OVERALL	1.170

CAPACITY	UNITS	ADJ
STORIES	1.75	1.00
ROOMS	6	1.00
BEDROOMS	3	1.00
BATHROOMS	2	1.00
FIXTURES	10	1.00
GARAGE CAPACITY	0	1.00
% BSMT FINISH	0	1.00
# OF HALF BATHS	1	1.00
# OF UNITS	1	1.00

ELEMENT	CD	DESCRIPTION	ADJ
FOUNDATION	4	FLR/WALL(FULL)	1.00
EXT COVER	1	WOOD SHINGLE	1.02
ROOF SHAPE	1	GABLE	1.00
ROOF COVER	1	ASPH/COMP SHIN	1.00
FLOOR COVER	1	HARDWOOD	1.02
INT. FINISH	1	PLASTER	1.00
HEATING/COOLING	9	WARM-COOL AIR	1.03
FUEL SOURCE	2	GAS	1.00
USE	0		1.00

S	BAT	T	DESCRIPTION	UNITS	YB	ADJ PRICE	RCN
+	BMU	N	BSMT UNFINISHED	780		73.43	57,278
+	BAS	L	BASE AREA	780	1953	316.36	246,757
+	USF	L	UPPER STORY FIN	644	2002	173.46	111,709
B	OPA	N	OPEN PORCH	36		129.97	4,679
C	CRL	N	BSMT CRAWL	171		54.65	9,345
C	BAS	L	BASE AREA	171	2002	316.35	54,097
+	DKC	N	DECK-COMPOSITE	438		100.16	43,872
F	OVH	L	OVERHANG	34	2002	288.89	9,822
H	PTA	N	PATIO	506		21.69	10,976
	BMF	N	BSMT FINISH	300		93.21	27,964
	FIX	O	XTRA FIXTURES	5		3,397.34	16,987
	GFP	O	GAS FIREPLACE	1		10,209.90	10,210
	HTB	O	HOT TUB	1		9,790.30	9,790

TOTAL RCN	613,485

CONDITION ELEM	CD
EXTERIOR	A
INTERIOR	A
KITCHEN	A
BATHS	A
HEAT	A
ELECT	A

EFF.YR/AGE	2000 / 22		
COND	19	19 %	
FUNC	0		
ECON	0		
DEPR	19	% GD	81
RCNLD			$496,900