Key: 8589

Town of Bourne - Fiscal Year 2024

12/18/2023 6:02 pm SEQ #: 8,754

LEGAL

CURRENT OWNER	PARCEL ID	LOCATION
LASCARI ELEANOR M 56 BARLOWS LANDING RD POCASSET, MA 02559	39.0-137-0	56 BARLOWS LANDING RD

TRANSFER HISTORY	DOS	T	SALE PRICE	BK-PG (Cert)
LASCARI ELEANOR M	01/30/2017	QS	335,000	(211982)
CONWAY JOHN P	03/30/1999	QS	111,000	(152495)
FERNANDES DENNIS E &		XX		00845-00062

CLASS	CLASS%	DESCRIPTION	BN ID	BN	CARD
1010	100	SINGLE FAMILY		1	1 of 1

PMT NO	PMT DT	TY	DESC	AMOUNT	INSP	BY	1st	%
19806	08/30/2019	3	ALT/RENO	4,399			100	100
18603	07/23/2018	15	INSULATE/WEA	4,000			100	100
05405	06/16/2005	2	ADDITIONS	70,000	09/19/2008	TL	100	100
01315	06/05/2001	9	DECK	5,000	06/03/2002	TL	100	100
01018	01/16/2001	3	ALT/RENO	2,500	06/03/2002	TL	100	100

LAND

CD	T	AC/SF/UN	Nbhd	Infl1	N_Index	ADJ BASE	SAF	Topo	Lpi	VC	CREDIT AMT	ADJ VALUE
100	S	28,660	11 1.00	100 1.00	100 1.00	247,485	1.28	A 1.00	R06 1.05			208,520

TOTAL	28,662 SF	ZONING	1	FRNT	0

Nbhd	POC
Infl1	AVG
N_Index	AVG

NOTE

ASSESSED	CURRENT	PREVIOUS
LAND	208,500	184,600
BUILDING	421,300	377,300
DETACHED	0	0
OTHER	0	0
TOTAL	**629,800**	**561,900**

DETACHED

TY	QUAL	COND	DIM/NOTE	YB	UNITS	ADJ PRICE	RCNLD
SHF	A 1.00	30 0.70	8 X 10		1	17.61	

PHOTO 03/28/2019

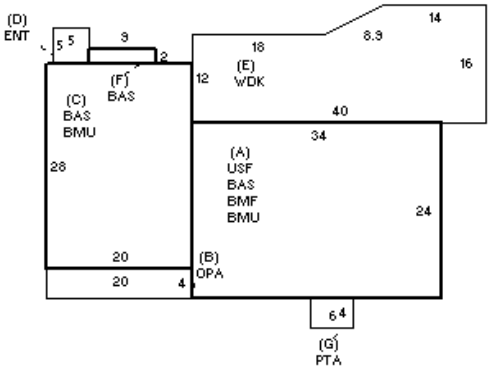

BLDG COMMENTS

BUILDING

BUILDING	CD	ADJ	DESC
MODEL	1		RESIDENTIAL
STYLE	5	1.00	COLONIAL [100%]
QUALITY	A	1.00	AVERAGE [100%]
FRAME	1	1.00	WOOD FRAME [100%]

MEASURE	3/28/2019	RP
LIST	3/28/2019	EST
REVIEW		

YEAR BLT	1985	SIZE ADJ	1.005
NET AREA	2,210	DETAIL ADJ	1.000
$NLA(RCN)	$227	OVERALL	1.090

CAPACITY	UNITS	ADJ
STORIES	2	1.00
ROOMS	6	1.00
BEDROOMS	2	1.00
BATHROOMS	2	1.00
FIXTURES	8	1.00
GARAGE CAPACITY	0	1.00
% BSMT FINISH	0	1.00
# OF HALF BATHS	1	1.00
# OF UNITS	1	1.00

ELEMENT	CD	DESCRIPTION	ADJ
FOUNDATION	4	FLR/WALL(FULL)	1.00
EXT COVER	1	WOOD SHINGLE	1.02
ROOF SHAPE	3	GAMBREL	1.00
ROOF COVER	1	ASPH/COMP SHIN	1.00
FLOOR COVER	1	HARDWOOD	1.02
INT. FINISH	2	DRYWALL	1.00
HEATING/COOLING	11	HT WATER CL AIR	1.05
FUEL SOURCE	2	GAS	1.00
USE	0		1.00

S	BAT	T	DESCRIPTION	UNITS	YB	ADJ PRICE	RCN
+	BMU	N	BSMT UNFINISHED	1,376		35.00	48,154
A	BMF	N	BSMT FINISH	816		38.02	31,025
A	BAS	L	BASE AREA	816	1985	205.92	168,034
A	USF	L	UPPER STORY FIN	816	1985	117.93	96,228
B	OPA	N	OPEN PORCH	80		78.72	6,298
D	ENT	N	ENCLOSED ENTRY	25		125.10	3,128
E	WDK	N	WOOD DECK	552		23.40	12,917
+	BAS	L	BASE AREA	578	2005	205.92	119,024
G	PTA	N	PATIO	24		18.49	444
	FIX	O	XTRA FIXTURES	4		2,332.75	9,331
	GFP	O	GAS FIREPLACE	1		7,010.90	7,011

TOTAL RCN	501,592

CONDITION ELEM	CD
EXTERIOR	A
INTERIOR	A
KITCHEN	G
BATHS	G
HEAT	A
ELECT	A

EFF.YR/AGE	2003 / 19	
COND	16	16 %
FUNC	0	
ECON	0	
DEPR	16	% GD 84
RCNLD		$421,300