Key: 8726

Town of Bourne - Fiscal Year 2024

12/18/2023 6:02 pm SEQ #: 8,899

LEGAL

CURRENT OWNER	PARCEL ID	LOCATION
IPPOLITO FRANK J & C/O IPPOLITO FRANK J & 36 SPINNAKER LANE POCASSET, MA 02559	39.0-249-0	36 SPINNAKER LN

TRANSFER HISTORY	DOS	T	SALE PRICE	BK-PG (Cert)
IPPOLITO FRANK J &	09/05/2023	F	10	35972-18
IPPOLITO FRANK J &	10/17/1997	QS	153,900	11011-325
PRIESTLY DONALD H TR	06/29/1994	B	850,000	N/A-N/A

CLASS	CLASS%	DESCRIPTION	BN ID	BN	CARD
1010	100	SINGLE FAMILY		1	1 of 1

PMT NO	PMT DT	TY	DESC	AMOUNT	INSP	BY	1st	%
05566	08/19/2005	9	DECK	7,800	11/03/2009	TL	100	100
02714	10/23/2002	2	ADDITIONS	5,000	06/21/2004	JS	100	100
980092	03/03/1998	3	ALT/RENO	2,500	02/05/1999	JS	100	100
970546	10/28/1997	8	POOL	11,350	05/20/1998	JS	100	100
970320	06/19/1997	1	NEW CONSTRUC	80,000	05/20/1998	JS	100	100

LAND

CD	T	AC/SF/UN	Nbhd	Infl1	N_Index	ADJ BASE	SAF	Topo	Lpi	VC	CREDIT AMT	ADJ VALUE
100	S	17,689	11 1.00	100 1.00	100 1.00	235,700	1.90	A 1.00	R05 1.00			181,380

TOTAL	17,685 SF	ZONING	1	FRNT	0

Nbhd	POC
Infl1	AVG
N_Index	AVG

NOTE

ASSESSED	CURRENT	PREVIOUS
LAND	181,400	160,500
BUILDING	336,100	301,100
DETACHED	15,100	14,300
OTHER	0	0
TOTAL	**532,600**	**475,900**

DETACHED

TY	QUAL	COND	DIM/NOTE	YB	UNITS	ADJ PRICE	RCNLD
IPG	A 1.00	10 0.90	16 X 32	1997	512	29.72	13,700
SHF	A 1.00	10 0.90	8 X 10	2003		17.61	
PTD	G 1.20	10 0.90	16 X 20		320	4.79	1,400

PHOTO 11/03/2009

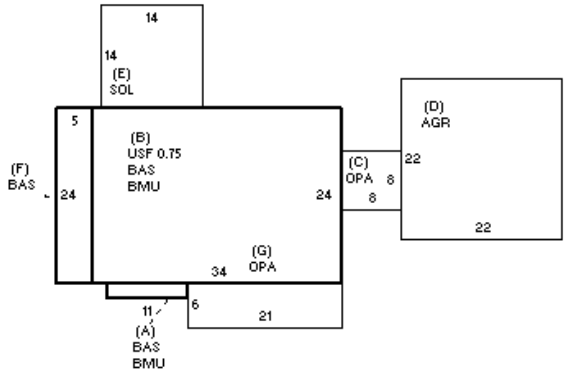

BLDG COMMENTS

BUILDING

BUILDING	CD	ADJ	DESC
MODEL	1		RESIDENTIAL
STYLE	4	1.05	CAPE [100%]
QUALITY	+	1.05	AVERAGE + [100%]
FRAME	1	1.00	WOOD FRAME [100%]

MEASURE	6/21/2004	JS
LIST	2/5/1999	JS
REVIEW	11/3/2009	TL

YEAR BLT	1997	SIZE ADJ	1.010
NET AREA	1,570	DETAIL ADJ	1.000
$NLA(RCN)	$264	OVERALL	1.110

CAPACITY	UNITS	ADJ
STORIES	1.75	1.00
ROOMS	6	1.00
BEDROOMS	2	1.00
BATHROOMS	1	1.00
FIXTURES	7	1.00
GARAGE CAPACITY	2	1.00
% BSMT FINISH	0	1.00
# OF HALF BATHS	1	1.00
# OF UNITS	1	1.00

ELEMENT	CD	DESCRIPTION	ADJ
FOUNDATION	4	FLR/WALL(FULL)	1.00
EXT COVER	1	WOOD SHINGLE	1.02
ROOF SHAPE	1	GABLE	1.00
ROOF COVER	1	ASPH/COMP SHIN	1.00
FLOOR COVER	1	HARDWOOD	1.02
INT. FINISH	2	DRYWALL	1.00
HEATING/COOLING	2	HOT WATER	1.02
FUEL SOURCE	2	GAS	1.00
USE	0		1.00

S	BAT	T	DESCRIPTION	UNITS	YB	ADJ PRICE	RCN
+	BMU	N	BSMT UNFINISHED	838		42.93	35,972
B	USF	L	UPPER STORY FIN	612	1997	128.00	78,334
+	OPA	N	OPEN PORCH	190		76.94	14,618
D	AGR	N	ATT GARAGE	484		72.75	35,213
E	SOL	N	SOLARIUM	196		112.82	22,113
+	BAS	L	BASE AREA	958	1997	233.44	223,631
	FIX	O	XTRA FIXTURES	2		2,506.75	5,014

TOTAL RCN 414,894

CONDITION ELEM	CD
EXTERIOR	A
INTERIOR	A
KITCHEN	A
BATHS	A
HEAT	A
ELECT	A

EFF.YR/AGE 2000 / 22

COND	19	19 %	
FUNC	0		
ECON	0		
DEPR	19	% GD	81

RCNLD $336,100