Key: 8731

Town of Bourne - Fiscal Year 2024

12/18/2023 6:02 pm SEQ #: 8,904

LEGAL

CURRENT OWNER	PARCEL ID	LOCATION
HARRISON DAVID B & DEANNE HARRISON 46 SPINNAKER LN POCASSET, MA 02559-1912	39.0-254-0	46 SPINNAKER LN

TRANSFER HISTORY	DOS	T	SALE PRICE	BK-PG (Cert)
HARRISON DAVID B &	09/08/1997	QS	148,400	10940-138
PRIESTLY DONALD H TR	06/29/1994	B	850,000	N/A-N/A
RAFS LIMITED PARTNERSHIP	03/02/1994	B	100	N/A-N/A

CLASS	CLASS%	DESCRIPTION	BN ID	BN	CARD
1010	100	SINGLE FAMILY		1	1 of 1

PMT NO	PMT DT	TY	DESC	AMOUNT	INSP	BY	1st	%
		3	ALT/RENO		04/14/2020		100	100
20195	03/02/2020	3	ALT/RENO	35,622			100	100
19075	02/04/2019	14	SOLAR	29,000			100	100
17588	07/31/2017	3	ALT/RENO	1,804			100	100
970182	04/18/1997	1	NEW CONSTRUC	80,000	01/05/1998	JC	100	100

LAND

CD	T	AC/SF/UN	Nbhd	Infl1	N_Index	ADJ BASE	SAF	Topo	Lpi	VC	CREDIT AMT	ADJ VALUE
100	S	17,886	11 1.00	100 1.00	100 1.00	235,700	1.88	A 1.00	R05 1.00			181,690

TOTAL	17,903 SF	ZONING	1	FRNT	0

Nbhd	POC
Infl1	AVG
N_Index	AVG

NOTE

ASSESSED	CURRENT	PREVIOUS
LAND	181,700	160,800
BUILDING	334,000	299,200
DETACHED	1,100	1,100
OTHER	0	0
TOTAL	**516,800**	**461,100**

DETACHED

TY	QUAL	COND	DIM/NOTE	YB	UNITS	ADJ PRICE	RCNLD
SHF	A 1.00	30 0.70	8 X 12		96	16.90	1,100

PHOTO 08/20/2008

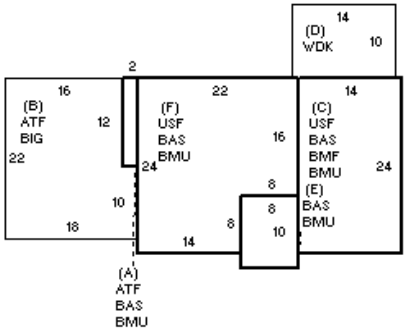

BLDG COMMENTS

BUILDING

BUILDING	CD	ADJ	DESC
MODEL	1		RESIDENTIAL
STYLE	5	1.00	COLONIAL [100%]
QUALITY	A	1.00	AVERAGE [100%]
FRAME	1	1.00	WOOD FRAME [100%]

MEASURE	8/20/2008	RJM
LIST	8/20/2008	RJM
REVIEW	4/14/2020	TL

YEAR BLT	1997	SIZE ADJ	1.010
NET AREA	1,704	DETAIL ADJ	1.000
$NLA(RCN)	$242	OVERALL	1.040

CAPACITY	UNITS	ADJ
STORIES	2	1.00
ROOMS	7	1.00
BEDROOMS	3	1.00
BATHROOMS	2	1.00
FIXTURES	10	1.00
GARAGE CAPACITY	1	1.00
% BSMT FINISH	0	1.00
# OF HALF BATHS	1	1.00
# OF UNITS	1	1.00

ELEMENT	CD	DESCRIPTION	ADJ
FOUNDATION	4	FLR/WALL(FULL)	1.00
EXT COVER	1	WOOD SHINGLE	1.02
ROOF SHAPE	1	GABLE	1.00
ROOF COVER	1	ASPH/COMP SHIN	1.00
FLOOR COVER	3	W/W CARPET	1.00
INT. FINISH	2	DRYWALL	1.00
HEATING/COOLING	2	HOT WATER	1.02
FUEL SOURCE	2	GAS	1.00
USE	0		1.00

S	BAT	T	DESCRIPTION	UNITS	YB	ADJ PRICE	RCN
+	BMU	N	BSMT UNFINISHED	904		38.30	34,625
+	BAS	L	BASE AREA	824	1997	208.30	171,639
A	ATF	N	ATTIC FINISH	24		65.21	1,565
B	BIG	N	BUILT-IN GARAGE	372		93.01	34,598
B	ATF	N	ATTIC FINISH	372		65.21	24,257
C	BMF	N	BSMT FINISH	336		61.38	20,623
+	USF	L	UPPER STORY FIN	800	1997	114.21	91,371
D	WDK	N	WOOD DECK	140		41.51	5,811
E	BAS	L	BASE AREA	80	1997	208.29	16,664
	FIX	O	XTRA FIXTURES	5		2,236.94	11,185

TOTAL RCN 412,337

CONDITION ELEM	CD
EXTERIOR	A
INTERIOR	A
KITCHEN	A
BATHS	A
HEAT	A
ELECT	A

EFF.YR/AGE 2000 / 22

COND	19	19 %	
FUNC	0		
ECON	0		
DEPR	19	% GD	81

RCNLD $334,000