Key: 8754

Town of Bourne - Fiscal Year 2024

12/18/2023 6:02 pm SEQ #: 8,932

LEGAL

CURRENT OWNER	PARCEL ID	LOCATION
CAMPBELL R BERNARD & G DENISE TRS G DENISE CAMPBELL TRUST 04 17 SUMMERSWEET CIR HANOVER, MA 02339	42.0-1-0	33 BEACON POINT RD

TRANSFER HISTORY	DOS	T	SALE PRICE	BK-PG (Cert)
CAMPBELL R BERNARD & G DE	11/03/2020	F	1	33431-349
CAMPBELL BERNARD R &	04/11/2006	O	750,000	20905-37
ROCHE LEO F JR & MARY M R	05/03/2005	F	1	19787-332

CLASS	CLASS%	DESCRIPTION	BN ID	BN	CARD
1010	100	SINGLE FAMILY		1	1 of 1

PMT NO	PMT DT	TY	DESC	AMOUNT	INSP	BY	1st	%
06787	12/20/2006	1	NEW CONSTRUC	144,000	08/13/2008	TL	100	100
960593	11/27/1996	2	ADDITIONS	47,500	01/22/2007	TL	100	100
940489	10/11/1994	3	ALT/RENO	3,300	02/02/1995	JS	100	100

LAND

CD	T	AC/SF/UN	Nbhd	Infl1	N_Index	ADJ BASE	SAF	Topo	Lpi	VC	CREDIT AMT	ADJ VALUE
100	S	15,300	11 1.00	100 1.00	100 1.00	942,800	2.15	A 1.00	BGD 4.00			710,550

TOTAL	15,290 SF	ZONING	1	FRNT	0
Nbhd	POC	NOTE			
Infl1	AVG				
N_Index	AVG				

ASSESSED	CURRENT	PREVIOUS
LAND	710,600	628,900
BUILDING	590,200	528,200
DETACHED	0	0
OTHER	0	0
TOTAL	**1,300,800**	**1,157,100**

DETACHED

TY	QUAL	COND	DIM/NOTE	YB	UNITS	ADJ PRICE	RCNLD

PHOTO 08/03/2023

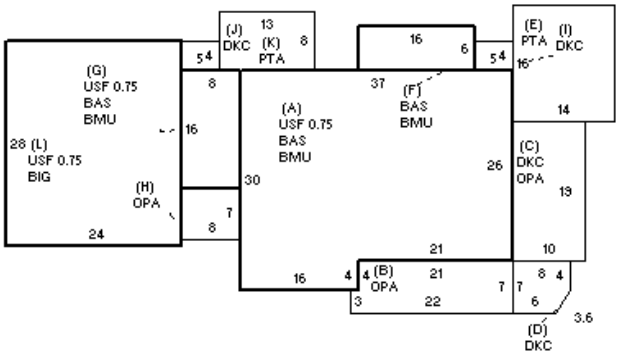

BLDG COMMENTS

BUILDING

BUILDING	CD	ADJ	DESC
MODEL	1		RESIDENTIAL
STYLE	4	1.05	CAPE [100%]
QUALITY	G	1.10	GOOD [100%]
FRAME	1	1.00	WOOD FRAME [100%]

MEASURE	8/13/2008	TL
LIST	5/29/2009	TL
REVIEW	5/29/2009	TL

YEAR BLT	2007	SIZE ADJ	1.000
NET AREA	2,620	DETAIL ADJ	1.000
$NLA(RCN)	$253	OVERALL	1.120

CAPACITY	UNITS	ADJ
STORIES	1.75	1.00
ROOMS	6	1.00
BEDROOMS	4	1.00
BATHROOMS	3	1.00
FIXTURES	13	1.00
GARAGE CAPACITY	2	1.00
% BSMT FINISH	0	1.00
# OF HALF BATHS	0	1.00
# OF UNITS	1	1.00

ELEMENT	CD	DESCRIPTION	ADJ
FOUNDATION	4	FLR/WALL(FULL)	1.00
EXT COVER	1	WOOD SHINGLE	1.02
ROOF SHAPE	1	GABLE	1.00
ROOF COVER	1	ASPH/COMP SHIN	1.00
FLOOR COVER	1	HARDWOOD	1.02
INT. FINISH	2	DRYWALL	1.00
HEATING/COOLING	9	WARM-COOL AIR	1.03
FUEL SOURCE	2	GAS	1.00
USE	0		1.00

S	BAT	T	DESCRIPTION	UNITS	YB	ADJ PRICE	RCN
+	BMU	N	BSMT UNFINISHED	1,250		39.36	49,198
+	BAS	L	BASE AREA	1,250	2007	231.59	289,492
+	USF	L	UPPER STORY FIN	1,370	2007	128.09	175,481
+	OPA	N	OPEN PORCH	396		72.50	28,712
+	DKC	N	DECK-COMPOSITE	283		77.35	21,891
+	PTA	N	PATIO	328		16.75	5,495
L	BIG	N	BUILT-IN GARAGE	672		90.86	61,057
	F21	O	FPL 2S 1OP	1		10,852.70	10,853
	FIX	O	XTRA FIXTURES	8		2,623.70	20,990

TOTAL RCN	663,167

CONDITION ELEM	CD
EXTERIOR	A
INTERIOR	A
KITCHEN	A
BATHS	A
HEAT	A
ELECT	A

EFF.YR/AGE	2008 / 14		
COND	11 11 %		
FUNC	0		
ECON	0		
DEPR	11	% GD	89
RCNLD	$590,200		