Key: 8778

Town of Bourne - Fiscal Year 2024

12/18/2023 6:02 pm SEQ #: 8,956

LEGAL

CURRENT OWNER	PARCEL ID	LOCATION
HANNAH JAMESON H & KELLY DONOVAN-HANNAH PO BOX 448 POCASSET, MA 02559	42.0-22-0	240 WINGS NECK RD

TRANSFER HISTORY	DOS	T	SALE PRICE	BK-PG (Cert)
HANNAH JAMESON H &	02/20/2020	F	1	32703-76
HANNAH JAMESON H & KELLY	10/04/2018	F	100	31576-282
HANNAH JAMESON H ETUX	08/01/2014	U	425,000	28301-228

CLASS	CLASS%	DESCRIPTION	BN ID	BN	CARD
1010	100	SINGLE FAMILY		1	1 of 1

PMT NO	PMT DT	TY	DESC	AMOUNT	INSP	BY	1st	%
18765	09/05/2018	2	ADDITIONS	100,000	03/05/2020	TL	100	100
910017	01/16/1991	10	WOODSTOVE	300	02/01/1992	HS	100	100

LAND

CD	T	AC/SF/UN	Nbhd		Infl1		N_Index		ADJ BASE	SAF	Topo		Lpi		VC	CREDIT AMT	ADJ VALUE
100	S	40,000	11	1.00	100	1.00	100	1.00	589,250	1.00	A	1.00	BA+	2.50			540,980
300	A	1.482	11	1.00	100	1.00	100	1.00	24,450	1.00	ML	0.60	BA+	2.50			36,230

TOTAL	2.400 Acres	ZONING	1	FRNT	0
Nbhd	POC	NOTE			
Infl1	AVG				
N_Index	AVG				

ASSESSED	CURRENT	PREVIOUS
LAND	577,200	468,300
BUILDING	613,400	612,500
DETACHED	26,200	6,100
OTHER	0	0
TOTAL	**1,216,800**	**1,086,900**

* -- Previous value excludes abatement.

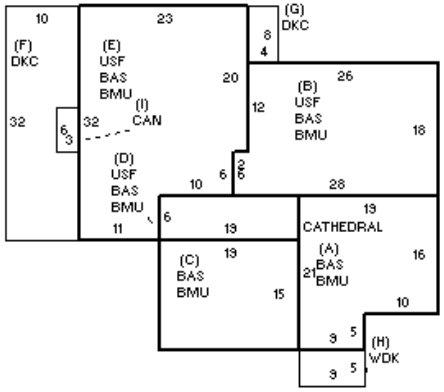

DETACHED

TY	QUAL		COND		DIM/NOTE	YB	UNITS	ADJ PRICE	RCNLD
SHF	G	1.20	10	0.90	12 X 18	2021	216	18.28	3,600
DGF	G	1.20	10	0.90	24 X 24		576	43.60	22,600

PHOTO 03/05/2020

BLDG COMMENTS

BUILDING

BUILDING	CD	ADJ	DESC
MODEL	1		RESIDENTIAL
STYLE	8	1.10	CONTEMPORARY [100%]
QUALITY	+	1.05	AVERAGE + [100%]
FRAME	1	1.00	WOOD FRAME [100%]

MEASURE	3/9/2023	RP
LIST	3/9/2023	TL
REVIEW	3/9/2023	RP

YEAR BLT	1983	SIZE ADJ	0.995
NET AREA	3,126	DETAIL ADJ	1.000
$NLA(RCN)	$220	OVERALL	1.150

CAPACITY	UNITS	ADJ
STORIES	2	1.00
ROOMS	7	1.00
BEDROOMS	3	1.00
BATHROOMS	3	1.00
FIXTURES	12	1.00
GARAGE CAPACITY	2	1.00
% BSMT FINISH	0	1.00
# OF HALF BATHS	0	1.00
# OF UNITS	1	1.00

ELEMENT	CD	DESCRIPTION	ADJ
FOUNDATION	4	FLR/WALL(FULL)	1.00
EXT COVER	8	PLYWOOD	0.98
ROOF SHAPE	1	GABLE	1.00
ROOF COVER	1	ASPH/COMP SHIN	1.00
FLOOR COVER	1	HARDWOOD	1.02
INT. FINISH	2	DRYWALL	1.00
HEATING/COOLING	11	HT WATER CL AIR	1.05
FUEL SOURCE	1	OIL	1.00
USE	0		1.00

S	BAT	T	DESCRIPTION	UNITS	YB	ADJ PRICE	RCN
+	BMU	N	BSMT UNFINISHED	1,880		35.63	66,977
A	BAS	L	BASE AREA	349	1983	212.80	74,266
+	BAS	L	BASE AREA	879	1983	212.80	187,050
+	USF	L	UPPER STORY FIN	594	1983	124.91	74,199
E	BAS	L	BASE AREA	652	2018	212.80	138,745
E	USF	L	UPPER STORY FIN	652	2018	124.91	81,444
+	DKC	N	DECK-COMPOSITE	352		75.44	26,555
H	WDK	N	WOOD DECK	45		76.15	3,427
I	CAN	N	CANOPY	18		18.56	334
	F21	O	FPL 2S 1OP	1		10,583.70	10,584
	FIX	O	XTRA FIXTURES	7		2,558.60	17,910
	GFP	O	GAS FIREPLACE	1		7,689.40	7,689

TOTAL RCN	689,178

CONDITION ELEM	CD
EXTERIOR	A
INTERIOR	G
KITCHEN	A
BATHS	A
HEAT	A
ELECT	A

EFF.YR/AGE	2008 / 14	
COND	11	11 %
FUNC	0	
ECON	0	
DEPR	11	% GD 89
RCNLD		$613,400