Key: 8839

Town of Bourne - Fiscal Year 2024

12/18/2023 6:02 pm SEQ #: 9,031

LEGAL

CURRENT OWNER	PARCEL ID	LOCATION
BEVERIDGE FRANKLIN S **PO BOX 1509** **POCASSET, MA 02559-1509**	**42.0-75-1**	**95 SOUTH RD**

TRANSFER HISTORY	DOS	T	SALE PRICE	BK-PG (Cert)
BEVERIDGE FRANKLIN S	11/04/1975	QS	75,000	2257-323

CLASS	CLASS%	DESCRIPTION	BN ID	BN	CARD
1010	**100**	**SINGLE FAMILY**		**1**	**1 of 1**

PMT NO	PMT DT	TY	DESC	AMOUNT	INSP	BY	1st	%
		3	ALT/RENO		01/14/2022	TL	100	100
		12	CYCLICAL		05/01/2018	DB	100	100
171038	12/20/2017	15	INSULATE/WEA	2,166			100	100
17177	03/14/2017	13	OTHER	1,730			100	100
12490	07/19/2012	4	DETACH.STRUC		10/01/2012		100	100

LAND

CD	T	AC/SF/UN	Nbhd	Infl1	N_Index	ADJ BASE	SAF	Topo	Lpi	VC	CREDIT AMT	ADJ VALUE
100	S	65,340	12 1.00	DCK 1.00	100 1.00	1,767,750	0.72	A 1.00	WNS 7.50			1,921,100

TOTAL	1.500 Acres	ZONING	2	FRNT	0

Nbhd	WINGS NCK
Infl1	DOCK
N_Index	AVG

NOTE: Chapter 91 License #92-3 Held in perpetuity and Chapter 91 License outhaul dual post #14-FB

ASSESSED	CURRENT	PREVIOUS
LAND	1,921,100	1,700,200
BUILDING	676,500	598,600
DETACHED	252,900	236,400
OTHER	0	0
TOTAL	**2,850,500**	**2,535,200**

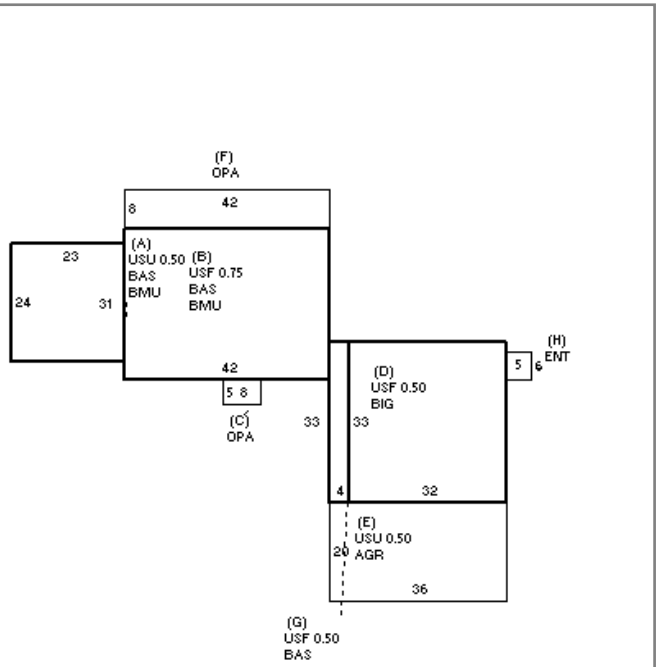

DETACHED

TY	QUAL	COND	DIM/NOTE	YB	UNITS	ADJ PRICE	RCNLD
PPD	E 1.90	10 0.90	3 X 200		600	344.28	185,900
DGF	L 0.90	10 0.90	18 X 60		1,080	29.45	28,600
FLD	E 1.90	10 0.90	8X24		192	114.76	19,800
FLD	E 1.90	10 0.90	6X30		180	114.76	18,600

PHOTO 01/14/2022

BLDG COMMENTS

BUILDING

BUILDING	CD	ADJ	DESC
MODEL	1		RESIDENTIAL
STYLE	4	1.05	CAPE [100%]
QUALITY	+	1.05	AVERAGE + [100%]
FRAME	1	1.00	WOOD FRAME [100%]

MEASURE	1/14/2022	TL
LIST	1/14/2022	EST
REVIEW	7/15/2022	RP

YEAR BLT	1976	SIZE ADJ	0.990
NET AREA	3,557	DETAIL ADJ	1.000
$NLA(RCN)	$247	OVERALL	1.100

CAPACITY	UNITS	ADJ
STORIES	1.75	1.00
ROOMS	11	1.00
BEDROOMS	6	1.00
BATHROOMS	4	1.00
FIXTURES	14	1.00
GARAGE CAPACITY	2	1.00
% BSMT FINISH	0	1.00
# OF HALF BATHS	0	1.00
# OF UNITS	1	1.00

ELEMENT	CD	DESCRIPTION	ADJ
FOUNDATION	4	FLR/WALL(FULL)	1.00
EXT COVER	2	CLAPBOARD	1.00
ROOF SHAPE	1	GABLE	1.00
ROOF COVER	1	ASPH/COMP SHIN	1.00
FLOOR COVER	1	HARDWOOD	1.02
INT. FINISH	2	DRYWALL	1.00
HEATING/COOLING	9	WARM-COOL AIR	1.03
FUEL SOURCE	2	GAS	1.00
USE	0		1.00

S	BAT	T	DESCRIPTION	UNITS	YB	ADJ PRICE	RCN
+	BMU	N	BSMT UNFINISHED	1,854		33.91	62,861
+	USU	N	UPPER STORY UNF	636		52.92	33,660
+	USF	L	UPPER STORY FIN	1,571	1976	118.88	186,764
+	OPA	N	OPEN PORCH	376		67.29	25,302
D	BIG	N	BUILT-IN GARAGE	1,056		80.03	84,516
E	AGR	N	ATT GARAGE	720		66.47	47,861
+	BAS	L	BASE AREA	1,986	1976	202.52	402,211
H	ENT	N	ENCLOSED ENTRY	30		96.66	2,900
	F22	O	FPL 2S 2OP	1		10,543.80	10,544
	FIX	O	XTRA FIXTURES	9		2,435.04	21,915

TOTAL RCN	878,535

CONDITION ELEM	CD
EXTERIOR	A
INTERIOR	A
KITCHEN	A
BATHS	A
HEAT	A
ELECT	A

EFF.YR/AGE	1996 / 26		
COND	23	23 %	
FUNC	0		
ECON	0		
DEPR	23	% GD	77
RCNLD			$676,500