Key: 8975

Town of Bourne - Fiscal Year 2024

12/18/2023 6:02 pm SEQ #: 9,176

LEGAL

CURRENT OWNER	PARCEL ID	LOCATION
GUSTAFSON HERMAN R & DIANE E GUSTAFSON 20 KEITH RD POCASSET, MA 02559-2101	43.0-44-0	20 KEITH RD

TRANSFER HISTORY	DOS	T	SALE PRICE	BK-PG (Cert)
GUSTAFSON HERMAN R &	11/30/1993	QS	135,000	8918-260

CLASS	CLASS%	DESCRIPTION	BN ID	BN	CARD
1010	100	SINGLE FAMILY		1	1 of 1

PMT NO	PMT DT	TY	DESC	AMOUNT	INSP	BY	1st	%
H452	05/29/2020	9	DECK				100	100
19055	01/28/2019	9	DECK	20,000	11/25/2019	RP	100	100
17796	09/28/2017	9	DECK	4,200	10/03/2017		100	100
10528	09/10/2010	8	POOL	35,000	08/08/2013	DB	100	100
06687	10/31/2006	4	DETACH.STRUC	5,400	11/16/2007	TL	100	100

LAND

CD	T	AC/SF/UN	Nbhd	Infl1	N_Index	ADJ BASE	SAF	Topo	Lpi	VC	CREDIT AMT	ADJ VALUE
100	S	20,734	11 1.00	100 1.00	100 1.00	271,055	1.66	A 1.00	R08 1.15			214,080

TOTAL	20,735 SF	ZONING	1	FRNT	0
Nbhd	POC	NOTE			
Infl1	AVG				
N_Index	AVG				

ASSESSED	CURRENT	PREVIOUS
LAND	214,100	181,200
BUILDING	376,800	337,600
DETACHED	38,800	36,900
OTHER	0	0
TOTAL	**629,700**	**555,700**

DETACHED

TY	QUAL	COND	DIM/NOTE	YB	UNITS	ADJ PRICE	RCNLD
SHF	A 1.00	50 0.50	8 X 8			0.00	
SHF	E 1.90	10 0.90	10 X 14	2006	104	31.20	2,900
IPG	S 3.00	10 0.90	14 X 30	2010	420	94.96	35,900

PHOTO 11/25/2019

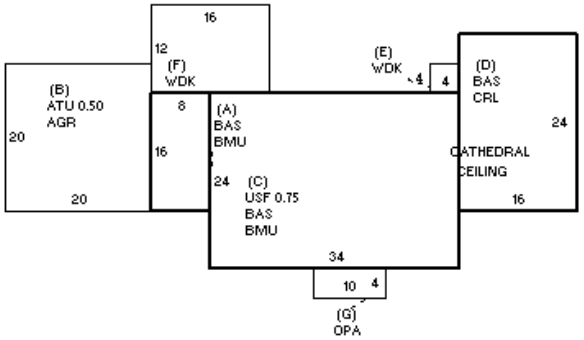

BLDG COMMENTS

BUILDING

BUILDING	CD	ADJ	DESC
MODEL	1		RESIDENTIAL
STYLE	4	1.05	CAPE [100%]
QUALITY	A	1.00	AVERAGE [100%]
FRAME	1	1.00	WOOD FRAME [100%]

MEASURE	11/25/2019	RP
LIST	11/25/2019	RP
REVIEW		

YEAR BLT	1977	SIZE ADJ	1.010
NET AREA	1,940	DETAIL ADJ	1.000
$NLA(RCN)	$243	OVERALL	1.100

CAPACITY	UNITS	ADJ
STORIES	1.75	1.00
ROOMS	6	1.00
BEDROOMS	3	1.00
BATHROOMS	2	1.00
FIXTURES	8	1.00
GARAGE CAPACITY	1	1.00
% BSMT FINISH	0	1.00
# OF HALF BATHS	0	1.00
# OF UNITS	1	1.00

ELEMENT	CD	DESCRIPTION	ADJ
FOUNDATION	4	FLR/WALL(FULL)	1.00
EXT COVER	1	WOOD SHINGLE	1.02
ROOF SHAPE	1	GABLE	1.00
ROOF COVER	1	ASPH/COMP SHIN	1.00
FLOOR COVER	13	HARDWOOD-W/W	1.00
INT. FINISH	2	DRYWALL	1.00
HEATING/COOLING	9	WARM-COOL AIR	1.03
FUEL SOURCE	2	GAS	1.00
USE	0		1.00

S	BAT	T	DESCRIPTION	UNITS	YB	ADJ PRICE	RCN
+	BMU	N	BSMT UNFINISHED	944		40.51	38,244
+	BAS	L	BASE AREA	944	1977	208.85	197,153
B	AGR	N	ATT GARAGE	400		77.55	31,018
B	ATU	N	ATTIC UNF	200		46.96	9,391
C	USF	L	UPPER STORY FIN	612	1977	120.80	73,932
D	CRL	N	BSMT CRAWL	384		38.06	14,615
D	BAS	L	BASE AREA	384	2001	208.85	80,198
+	WDK	N	WOOD DECK	208		28.77	5,985
G	OPA	N	OPEN PORCH	40		90.52	3,621
	F21	O	FPL 2S 1OP	1		9,786.80	9,787
	FIX	O	XTRA FIXTURES	3		2,366.07	7,098

TOTAL RCN	471,041

CONDITION ELEM	CD
EXTERIOR	A
INTERIOR	A
KITCHEN	G
BATHS	A
HEAT	A
ELECT	A

EFF.YR/AGE	1999 / 23		
COND	20	20 %	
FUNC	0		
ECON	0		
DEPR	20	% GD	80
RCNLD			$376,800