Key: 9028

Town of Bourne - Fiscal Year 2024

12/18/2023 6:02 pm SEQ #: 9,228

LEGAL

CURRENT OWNER	PARCEL ID	LOCATION
DWYER ROBERT L ETUX KATHERINE E DWYER 25 KENWOOD DR POCASSET, MA 02559-1718	43.1-17-0	25 KENWOOD RD

TRANSFER HISTORY	DOS	T	SALE PRICE	BK-PG (Cert)
DWYER ROBERT L ETUX	04/29/2002	QS	390,000	15096-69
BURBINE ANNE	06/28/2001	H		13985-154
BURBINE NORMAN H		XX		03642-0307

CLASS	CLASS%	DESCRIPTION	BN ID	BN	CARD
1010	100	SINGLE FAMILY		1	1 of 1

PMT NO	PMT DT	TY	DESC	AMOUNT	INSP	BY	1st	%
19881	09/23/2019	3	ALT/RENO	3,500	04/28/2021		100	100
15812	09/14/2015	14	SOLAR	21,000			100	100
13440	07/10/2013	3	ALT/RENO	6,800	02/26/2015	TL	100	100
10079	03/10/2010	3	ALT/RENO	5,000	02/26/2015	TL	100	100
09541	10/26/2009	2	ADDITIONS	24,500	02/08/2010	TL	100	100

LAND

CD	T	AC/SF/UN	Nbhd	Infl1	N_Index	ADJ BASE	SAF	Topo	Lpi	VC	CREDIT AMT	ADJ VALUE
100	S	10,000	11 1.00	100 1.00	100 1.00	377,120	3.13	A 1.00	BAV 1.60			270,910

TOTAL	10,019 SF	ZONING	1	FRNT	0

Nbhd	POC
Infl1	AVG
N_Index	AVG

NOTE

ASSESSED	CURRENT	PREVIOUS
LAND	270,900	239,800
BUILDING	455,100	390,000
DETACHED	1,300	1,800
OTHER	0	0
TOTAL	**727,300**	**631,600**

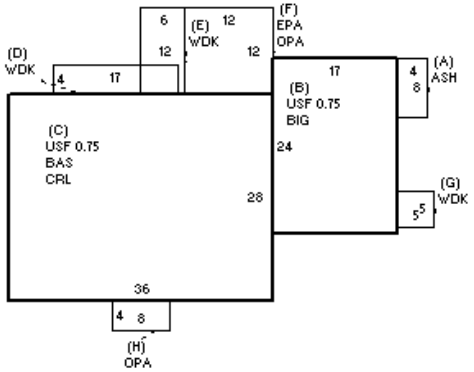

DETACHED

TY	QUAL	COND	DIM/NOTE	YB	UNITS	ADJ PRICE	RCNLD
SHF	A 1.00	50 0.50	10 X 16		160	15.95	1,300
SHF	A 1.00	50 0.50	8 X 12			0.00	
CAN	A 1.00	50 0.50	2 X 5		10	4.90	

PHOTO 11/02/2022

BLDG COMMENTS

BUILDING

BUILDING	CD	ADJ	DESC
MODEL	1		RESIDENTIAL
STYLE	4	1.05	CAPE [100%]
QUALITY	+	1.05	AVERAGE + [100%]
FRAME	1	1.00	WOOD FRAME [100%]

MEASURE	11/2/2022	SL
LIST	11/2/2022	EST
REVIEW	11/2/2022	SL

YEAR BLT	1983	SIZE ADJ	1.005
NET AREA	2,322	DETAIL ADJ	1.000
$NLA(RCN)	$223	OVERALL	1.110

CAPACITY	UNITS	ADJ
STORIES	1.75	1.00
ROOMS	6	1.00
BEDROOMS	4	1.00
BATHROOMS	3	1.00
FIXTURES	12	1.00
GARAGE CAPACITY	1	1.00
% BSMT FINISH	0	1.00
# OF HALF BATHS	0	1.00
# OF UNITS	1	1.00

ELEMENT	CD	DESCRIPTION	ADJ
FOUNDATION	3	FOUN. WALL	1.00
EXT COVER	1	WOOD SHINGLE	1.02
ROOF SHAPE	1	GABLE	1.00
ROOF COVER	1	ASPH/COMP SHIN	1.00
FLOOR COVER	1	HARDWOOD	1.02
INT. FINISH	2	DRYWALL	1.00
HEATING/COOLING	2	HOT WATER	1.02
FUEL SOURCE	2	GAS	1.00
USE	0		1.00

S	BAT	T	DESCRIPTION	UNITS	YB	ADJ PRICE	RCN
A	ASH	N	ATT SHED	32		29.14	932
B	BIG	N	BUILT-IN GARAGE	408		91.84	37,470
+	USF	L	UPPER STORY FIN	1,062	1983	121.78	129,331
C	CRL	N	BSMT CRAWL	1,008		23.84	24,027
C	BAS	L	BASE AREA	1,008	1983	224.86	226,654
+	WDK	N	WOOD DECK	165		40.97	6,760
+	OPA	N	OPEN PORCH	176		76.56	13,474
F	EPA	N	ENCLOSED PORCH	144		96.37	13,877
	USF	L	UPPER STORY FIN	252	1983	128.88	32,479
	CPC	O	CAPE CELLAR	1		4,422.90	4,423
	F21	O	FPL 2S 1OP	1		10,318.20	10,318
	FIX	O	XTRA FIXTURES	7		2,494.43	17,461

TOTAL RCN	517,206

CONDITION ELEM	CD
EXTERIOR	G
INTERIOR	A
KITCHEN	G
BATHS	G
HEAT	A
ELECT	U

EFF.YR/AGE	2007 / 15	
COND	12	12 %
FUNC	0	
ECON	0	
DEPR	12	% GD 88
RCNLD		$455,100