Key: 9109

Town of Bourne - Fiscal Year 2024

12/18/2023 6:02 pm SEQ #: 9,315

LEGAL

CURRENT OWNER	PARCEL ID	LOCATION
SAMPSON WAYNE & CATHERINE SAMPSON 429 BARLOWS LANDING RD POCASSET, MA 02559	43.1-105-0	429 BARLOWS LANDING RD

TRANSFER HISTORY	DOS	T	SALE PRICE	BK-PG (Cert)
SAMPSON WAYNE &	06/07/2016	F	100	29704-161
SAMPSON WAYNE &	08/12/2011	QS	550,000	25616-25
MITCHELL ANNE E	05/09/2011	N		25434-276/7

CLASS	CLASS%	DESCRIPTION	BN ID	BN	CARD
1090	100	MULTIPLE DWELLING		1	1 of 2

PMT NO	PMT DT	TY	DESC	AMOUNT	INSP	BY	1st	%
19243	04/03/2019	15	INSULATE/WEA	1,447			100	100
17074	01/30/2017	2	ADDITIONS	110,000	06/11/2018	TL	100	100
151007	11/02/2015	4	DETACH.STRUC	12,000	03/16/2017	TL	100	100
14596	07/23/2014	4	DETACH.STRUC	3,047	09/04/2014		100	100
14165	03/24/2014	3	ALT/RENO	6,000	03/16/2017	TL	100	100

LAND

CD	T	AC/SF/UN	Nbhd	Infl1	N_Index	ADJ BASE	SAF	Topo	Lpi	VC	CREDIT AMT	ADJ VALUE
100	S	32,700	11 1.00	100 1.00	100 1.00	377,120	1.16	A 1.00	BAV 1.60			327,890

TOTAL	32,714 SF	ZONING	1	FRNT	0
Nbhd	POC	NOTE			
Infl1	AVG				
N_Index	AVG				

ASSESSED	CURRENT	PREVIOUS
LAND	327,900	290,200
BUILDING	624,100	558,600
DETACHED	90,800	86,600
OTHER	98,900	87,500
TOTAL	**1,141,700**	**1,022,900**

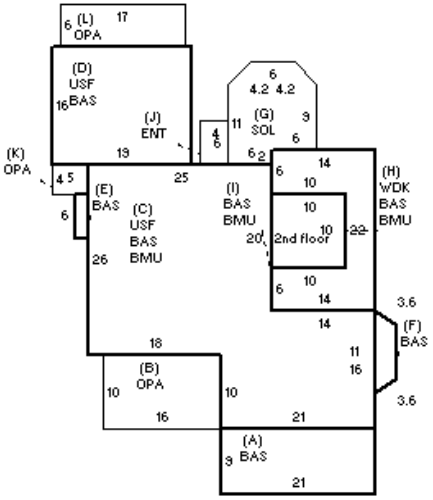

DETACHED

TY	QUAL	COND	DIM/NOTE	YB	UNITS	ADJ PRICE	RCNLD
GFL	G 1.20	10 0.90	18 X 25		450	53.52	21,700
GUL	E 1.90	10 0.90	28 X 42	2018	1,176	64.22	68,000
OPS	E 1.90	10 0.90	5 X 8	2018	40	31.92	1,100

PHOTO 06/12/2018

BLDG COMMENTS

BUILDING

BUILDING	CD	ADJ	DESC
MODEL	1		RESIDENTIAL
STYLE	9	1.20	ANTIQUE [100%]
QUALITY	A	1.00	AVERAGE [100%]
FRAME	1	1.00	WOOD FRAME [100%]

MEASURE	6/11/2018	TL
LIST	3/14/2017	TL
REVIEW	8/19/2021	RP

YEAR BLT	1790	SIZE ADJ	0.995
NET AREA	3,032	DETAIL ADJ	1.000
$NLA(RCN)	$234	OVERALL	1.290

CAPACITY	UNITS	ADJ
STORIES	2	1.00
ROOMS	8	1.00
BEDROOMS	3	1.00
BATHROOMS	3	1.00
FIXTURES	11	1.00
GARAGE CAPACITY	2	1.00
% BSMT FINISH	0	1.00
# OF HALF BATHS	0	1.00
# OF UNITS	1	1.00

ELEMENT	CD	DESCRIPTION	ADJ
FOUNDATION	4	FLR/WALL(FULL)	1.00
EXT COVER	1	WOOD SHINGLE	1.02
ROOF SHAPE	1	GABLE	1.00
ROOF COVER	1	ASPH/COMP SHIN	1.00
FLOOR COVER	1	HARDWOOD	1.02
INT. FINISH	2	DRYWALL	1.00
HEATING/COOLING	11	HT WATER CL AIR	1.05
FUEL SOURCE	2	GAS	1.00
USE	0		1.00

S	BAT	T	DESCRIPTION	UNITS	YB	ADJ PRICE	RCN
+	BAS	L	BASE AREA	1,480	1790	227.34	336,458
+	OPA	N	OPEN PORCH	282		75.54	21,302
+	BMU	N	BSMT UNFINISHED	1,252		41.00	51,338
C	USF	L	UPPER STORY FIN	944	1790	133.45	125,975
D	BAS	L	BASE AREA	304	2017	227.34	69,110
D	USF	L	UPPER STORY FIN	304	2017	133.45	40,568
G	SOL	N	SOLARIUM	147		131.82	19,378
H	WDK	N	WOOD DECK	100		56.48	5,648
J	ENT	N	ENCLOSED ENTRY	24		146.59	3,518
	F21	O	FPL 2S 1OP	1		11,306.80	11,307
	FIX	O	XTRA FIXTURES	6		2,733.53	16,401
	GFP	O	GAS FIREPLACE	1		8,214.70	8,215

TOTAL RCN	709,218
CONDITION ELEM	CD
EXTERIOR	A
INTERIOR	G
KITCHEN	G
BATHS	A
HEAT	A
ELECT	U
EFF.YR/AGE	2007 / 15
COND	12 12 %
FUNC	0
ECON	0
DEPR	12 % GD 88
RCNLD	$624,100

Key: 9109

Town of Bourne - Fiscal Year 2024

12/18/2023 6:02 pm SEQ #: 9,316

LEGAL

CURRENT OWNER	PARCEL ID	LOCATION
SAMPSON WAYNE & CATHERINE SAMPSON 429 BARLOWS LANDING RD POCASSET, MA 02559	43.1-105-0	429 BARLOWS LANDING RD

TRANSFER HISTORY	DOS	T	SALE PRICE	BK-PG (Cert)

CLASS	CLASS%	DESCRIPTION	BN ID	BN	CARD
1090	100	MULTIPLE DWELLING		2	2 of 2

PMT NO	PMT DT	TY	DESC	AMOUNT	INSP	BY	1st	%

LAND

CD	T	AC/SF/UN	Nbhd	Infl1	N Index	ADJ BASE	SAF	Topo	Lpi	VC	CREDIT AMT	ADJ VALUE

TOTAL		ZONING	FRNT
Nbhd		NOTE	
Infl1			
N_Index			

ASSESSED	CURRENT	PREVIOUS
LAND		
BUILDING	98,900	
DETACHED		
OTHER		
TOTAL		

DETACHED

TY	QUAL	COND	DIM/NOTE	YB	UNITS	ADJ PRICE	RCNLD

PHOTO 03/20/2017

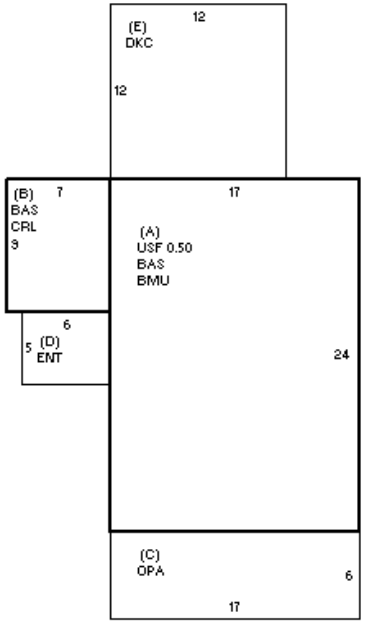

BLDG COMMENTS

BUILDING

BUILDING	CD	ADJ	DESC
MODEL	1		RESIDENTIAL
STYLE	7	1.00	CONVENTIONAL [100%]
QUALITY	A	1.00	AVERAGE [100%]
FRAME	1	1.00	WOOD FRAME [100%]

MEASURE	3/14/2017	TL
LIST	3/14/2017	TL
REVIEW	3/14/2017	TL

YEAR BLT	1860	SIZE ADJ	1.020
NET AREA	675	DETAIL ADJ	1.000
$NLA(RCN)	$204	OVERALL	0.820

CAPACITY	UNITS	ADJ
STORIES	1.5	1.00
ROOMS	2	1.00
BEDROOMS	1	1.00
BATHROOMS	1	1.00
FIXTURES	5	1.00
GARAGE CAPACITY	0	1.00
% BSMT FINISH	0	1.00
# OF HALF BATHS	0	1.00
# OF UNITS	1	1.00

ELEMENT	CD	DESCRIPTION	ADJ
FOUNDATION	4	FLR/WALL(FULL)	1.00
EXT COVER	1	WOOD SHINGLE	1.02
ROOF SHAPE	1	GABLE	1.00
ROOF COVER	1	ASPH/COMP SHIN	1.00
FLOOR COVER	2	SOFTWOOD	1.02
INT. FINISH	3	WOOD PANEL	0.98
HEATING/COOLING	13	NONE	0.80
FUEL SOURCE	8	NONE	1.00
USE	0		1.00

S	BAT	T	DESCRIPTION	UNITS	YB	ADJ PRICE	RCN
A	BMU	N	BSMT UNFINISHED	408		38.50	15,708
+	BAS	L	BASE AREA	471	1860	181.61	85,540
A	USF	L	UPPER STORY FIN	204	1860	92.03	18,775
B	CRL	N	BSMT CRAWL	63		28.65	1,805
C	OPA	N	OPEN PORCH	102		57.38	5,853
D	ENT	N	ENCLOSED ENTRY	30		70.70	2,121
E	DKC	N	DECK-COMPOSITE	144		52.52	7,563

TOTAL RCN	137,365

CONDITION ELEM	CD
EXTERIOR	F
INTERIOR	A
KITCHEN	A
BATHS	A
HEAT	
ELECT	O

EFF.YR/AGE	1991 / 31	
COND	28	28 %
FUNC	0	
ECON	0	
DEPR	28	% GD 72
RCNLD		$98,900