Key: 9232

Town of Bourne - Fiscal Year 2024

12/18/2023 6:02 pm SEQ #: 9,440

LEGAL

CURRENT OWNER	PARCEL ID	LOCATION
INNIS LOUISE F PO BOX 22 POCASSET, MA 02559-0022	43.1-236-0	9 ISLAND DR

TRANSFER HISTORY	DOS	T	SALE PRICE	BK-PG (Cert)
INNIS LOUISE F	11/07/1989	XX		974-35

CLASS	CLASS%	DESCRIPTION	BN ID	BN	CARD
1010	100	SINGLE FAMILY		1	1 of 1

PMT NO	PMT DT	TY	DESC	AMOUNT	INSP	BY	1st	%
16158	03/04/2016	3	ALT/RENO	4,399			100	100
14023	01/16/2014	3	ALT/RENO	2,700	06/23/2014		100	100
13448	07/19/2013	3	ALT/RENO	6,000	06/23/2014		100	100
900327	06/26/1990	9	DECK	1,500	11/15/1991	HS	100	100

LAND

CD	T	AC/SF/UN	Nbhd	Infl1	N_Index	ADJ BASE	SAF	Topo	Lpi	VC	CREDIT AMT	ADJ VALUE
100	S	10,182	11 1.00	100 1.00	100 1.00	518,540	3.08	A 1.00	BA- 2.20			373,120

TOTAL	10,193 SF	ZONING	1	FRNT	0

Nbhd	POC
Infl1	AVG
N_Index	AVG

NOTE: ALSO OWNS CONTIGUOUS LOT 43.3/47.1 WHICH IS UNBUILDABLE

ASSESSED	CURRENT	PREVIOUS
LAND	373,100	247,700
BUILDING	275,300	243,600
DETACHED	1,700	1,600
OTHER	0	0
TOTAL	**650,100**	**492,900**

DETACHED

TY	QUAL	COND	DIM/NOTE	YB	UNITS	ADJ PRICE	RCNLD
SHF	A 1.00	20 0.80	8X16		128	16.42	1,700

PHOTO 09/11/2008

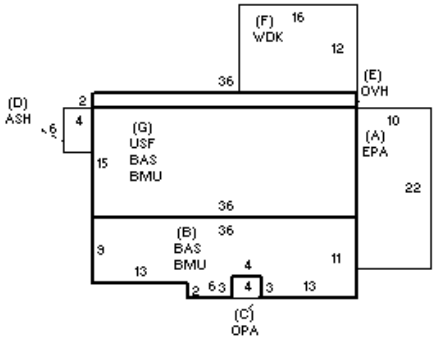

BLDG COMMENTS

BUILDING

BUILDING	CD	ADJ	DESC
MODEL	1		RESIDENTIAL
STYLE	4	1.05	CAPE [100%]
QUALITY	A	1.00	AVERAGE [100%]
FRAME	1	1.00	WOOD FRAME [100%]

MEASURE	4/5/2016	SW
LIST	4/5/2016	EST
REVIEW		

YEAR BLT	1955	SIZE ADJ	1.010
NET AREA	1,510	DETAIL ADJ	1.000
$NLA(RCN)	$234	OVERALL	1.070

CAPACITY	UNITS	ADJ
STORIES	1.75	1.00
ROOMS	7	1.00
BEDROOMS	3	1.00
BATHROOMS	2	1.00
FIXTURES	9	1.00
GARAGE CAPACITY	0	1.00
% BSMT FINISH	0	1.00
# OF HALF BATHS	0	1.00
# OF UNITS	1	1.00

ELEMENT	CD	DESCRIPTION	ADJ
FOUNDATION	4	FLR/WALL(FULL)	1.00
EXT COVER	1	WOOD SHINGLE	1.02
ROOF SHAPE	1	GABLE	1.00
ROOF COVER	1	ASPH/COMP SHIN	1.00
FLOOR COVER	1	HARDWOOD	1.02
INT. FINISH	3	WOOD PANEL	0.98
HEATING/COOLING	1	FORCED AIR	1.00
FUEL SOURCE	2	GAS	1.00
USE	0		1.00

S	BAT	T	DESCRIPTION	UNITS	YB	ADJ PRICE	RCN
A	EPA	N	ENCLOSED PORCH	220		70.50	15,509
+	BMU	N	BSMT UNFINISHED	898		39.41	35,388
+	BAS	L	BASE AREA	898	1955	214.31	192,448
C	OPA	N	OPEN PORCH	12		102.76	1,233
D	ASH	N	ATT SHED	24		26.88	645
E	OVH	L	OVERHANG	72	1955	195.71	14,091
F	WDK	N	WOOD DECK	192		37.80	7,258
G	USF	L	UPPER STORY FIN	540	1955	118.91	64,213
	F11	O	FPL 1S 1OP	1		8,665.10	8,665
	FIX	O	XTRA FIXTURES	4		2,301.35	9,205
	MST	O	MAS/METAL STACK	1		4,313.10	4,313

TOTAL RCN	352,969

CONDITION ELEM	CD
EXTERIOR	A
INTERIOR	A
KITCHEN	A
BATHS	G
HEAT	A
ELECT	A

EFF.YR/AGE	1997 / 25		
COND	22	22 %	
FUNC	0		
ECON	0		
DEPR	22	% GD	78
RCNLD			$275,300