Key: 9337

Town of Bourne - Fiscal Year 2024

12/18/2023 6:02 pm SEQ #: 9.553

LEGAL

CURRENT OWNER	PARCEL ID	LOCATION
MURPHY EDMUND III & JOHN M MURPHY & MARY ELLEN MURPHY PO BOX 453 MILTON, MA 02186	43.3-32-0	47 BELLAVISTA DR

TRANSFER HISTORY	DOS	T	SALE PRICE	BK-PG (Cert)
MURPHY EDMUND III & JOHN	10/21/2016	F	1	(211062)
MURPHY EDMUND III & JOHN	10/21/2016	F	55,000	(35932)
MURPHY EDMUND III & JOHN	10/21/2016	F	55,000	(35932)

CLASS	CLASS%	DESCRIPTION	BN ID	BN	CARD
1010	100	SINGLE FAMILY		1	1 of 1

PMT NO	PMT DT	TY	DESC	AMOUNT	INSP	BY	1st	%
04205	04/05/2004	2	ADDITIONS	100,000	08/15/2005	DB	100	100

LAND

CD	T	AC/SF/UN	Nbhd	Infl1	N_Index	ADJ BASE	SAF	Topo	Lpi	VC	CREDIT AMT	ADJ VALUE
100	S	9,500	11 1.00	100 1.00	100 1.00	518,540	3.28	A 1.00	BA- 2.20			370,770

TOTAL	9,496 SF	ZONING	1	FRNT	0

Nbhd	POC
Infl1	AVG
N_Index	AVG

NOTE

ASSESSED	CURRENT	PREVIOUS
LAND	370,800	328,100
BUILDING	625,700	572,300
DETACHED	0	0
OTHER	0	0
TOTAL	**996,500**	**900,400**

DETACHED

TY	QUAL	COND	DIM/NOTE	YB	UNITS	ADJ PRICE	RCNLD

PHOTO 08/03/2023

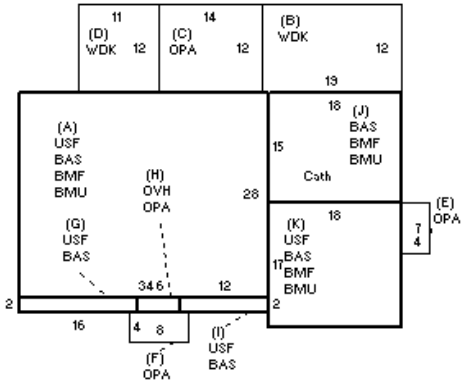

BLDG COMMENTS

BUILDING

BUILDING	CD	ADJ	DESC
MODEL	1		RESIDENTIAL
STYLE	5	1.00	COLONIAL [100%]
QUALITY	+	1.05	AVERAGE + [100%]
FRAME	1	1.00	WOOD FRAME [100%]

MEASURE	8/3/2023	SL
LIST	8/3/2023	SL
REVIEW	8/3/2023	SL

YEAR BLT	1971	SIZE ADJ	1.000
NET AREA	2,910	DETAIL ADJ	1.000
$NLA(RCN)	$236	OVERALL	1.090

CAPACITY	UNITS	ADJ
STORIES	2	1.00
ROOMS	4	1.00
BEDROOMS	6	1.00
BATHROOMS	5	1.00
FIXTURES	18	1.00
GARAGE CAPACITY	0	1.00
% BSMT FINISH	100	1.00
# OF HALF BATHS	0	1.00
# OF UNITS	1	1.00

ELEMENT	CD	DESCRIPTION	ADJ
FOUNDATION	4	FLR/WALL(FULL)	1.00
EXT COVER	1	WOOD SHINGLE	1.02
ROOF SHAPE	1	GABLE	1.00
ROOF COVER	1	ASPH/COMP SHIN	1.00
FLOOR COVER	1	HARDWOOD	1.02
INT. FINISH	2	DRYWALL	1.00
HEATING/COOLING	11	HT WATER CL AIR	1.05
FUEL SOURCE	2	GAS	1.00
USE	0		1.00

S	BAT	T	DESCRIPTION	UNITS	YB	ADJ PRICE	RCN
+	BMU	N	BSMT UNFINISHED	1,528		36.56	55,868
A	BMF	N	BSMT FINISH	952		39.72	37,818
+	USF	L	UPPER STORY FIN	1,314	2004	118.99	156,355
+	WDK	N	WOOD DECK	360		24.45	8,801
+	OPA	N	OPEN PORCH	240		67.36	16,166
+	BAS	L	BASE AREA	1,008	1971	209.96	211,643
H	OVH	L	OVERHANG	12	2004	207.25	2,487
J	BMF	N	BSMT FINISH	270		66.87	18,056
+	BAS	L	BASE AREA	576	2004	209.96	120,939
K	BMF	N	BSMT FINISH	306		66.87	20,464
	FIX	O	XTRA FIXTURES	13		2,437.35	31,686
	GFP	O	GAS FIREPLACE	1		7,324.80	7,325

TOTAL RCN	687,606

CONDITION ELEM	CD
EXTERIOR	G
INTERIOR	G
KITCHEN	A
BATHS	A
HEAT	U
ELECT	A

EFF.YR/AGE	2010 / 12		
COND	9 9 %		
FUNC	0		
ECON	0		
DEPR	9	% GD	91
RCNLD	$625,700		