Key: 9455

Town of Bourne - Fiscal Year 2024

12/18/2023 6:02 pm SEQ #: 9,673

LEGAL

CURRENT OWNER	PARCEL ID	LOCATION
AVERY GERALDINE TR OF THE AVERY FAMILY REALTY TRUST 11300 QUAIL CREEK RD APT 3 OKLAHOMA CITY, OK 73120	43.3-173-0	39 NAUMKEAG AVE

TRANSFER HISTORY	DOS	T	SALE PRICE	BK-PG (Cert)
AVERY GERALDINE TR OF	12/27/2005	F	1	20607-55
AVERY GERALDINE	12/07/1993	XX		08931-00199

CLASS	CLASS%	DESCRIPTION	BN ID	BN	CARD
1010	100	SINGLE FAMILY		1	1 of 1

PMT NO	PMT DT	TY	DESC	AMOUNT	INSP	BY	1st	%
990329	06/14/1999	9	DECK	7,700	11/10/1999	MS	100	100
920462	08/21/1992	3	ALT/RENO	500	08/15/1994	DMB	0	100

LAND

CD	T	AC/SF/UN	Nbhd	Infl1	N_Index	ADJ BASE	SAF	Topo	Lpi	VC	CREDIT AMT	ADJ VALUE
100	S	25,000	11 1.00	100 1.00	100 1.00	518,540	1.43	A 1.00	BA- 2.20			424,290

TOTAL	25,003 SF	ZONING	1	FRNT	0
Nbhd	POC	NOTE			
Infl1	AVG				
N_Index	AVG				

ASSESSED	CURRENT	PREVIOUS
LAND	424,300	375,500
BUILDING	256,900	227,300
DETACHED	2,200	2,100
OTHER	0	0
TOTAL	**683,400**	**604,900**

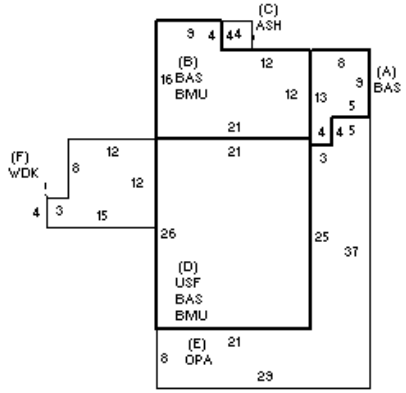

DETACHED

TY	QUAL	COND	DIM/NOTE	YB	UNITS	ADJ PRICE	RCNLD
SHF	A 1.00	20 0.80	10 X 17		170	15.95	2,200

PHOTO 11/03/2000

BLDG COMMENTS

BUILDING

BUILDING	CD	ADJ	DESC
MODEL	1		RESIDENTIAL
STYLE	5	1.00	COLONIAL [100%]
QUALITY	A	1.00	AVERAGE [100%]
FRAME	1	1.00	WOOD FRAME [100%]

MEASURE	8/8/2001	TL
LIST	8/8/2001	TL
REVIEW	8/8/2001	TL

YEAR BLT	1900	SIZE ADJ	1.015
NET AREA	1,464	DETAIL ADJ	1.000
$NLA(RCN)	$231	OVERALL	1.040

CAPACITY	UNITS	ADJ
STORIES	2	1.00
ROOMS	7	1.00
BEDROOMS	3	1.00
BATHROOMS	1	1.00
FIXTURES	8	1.00
GARAGE CAPACITY	0	1.00
% BSMT FINISH	0	1.00
# OF HALF BATHS	1	1.00
# OF UNITS	1	1.00

ELEMENT	CD	DESCRIPTION	ADJ
FOUNDATION	4	FLR/WALL(FULL)	1.00
EXT COVER	1	WOOD SHINGLE	1.02
ROOF SHAPE	2	HIP	1.02
ROOF COVER	1	ASPH/COMP SHIN	1.00
FLOOR COVER	1	HARDWOOD	1.02
INT. FINISH	1	PLASTER	1.00
HEATING/COOLING	7	FL/WALL UNIT	0.98
FUEL SOURCE	1	OIL	1.00
USE	0		1.00

S	BAT	T	DESCRIPTION	UNITS	YB	ADJ PRICE	RCN
+	BAS	L	BASE AREA	918	1900	209.33	192,166
+	BMU	N	BSMT UNFINISHED	834		38.49	32,103
C	ASH	N	ATT SHED	16		26.26	420
D	USF	L	UPPER STORY FIN	546	1900	116.15	63,418
E	OPA	N	OPEN PORCH	452		62.12	28,080
F	WDK	N	WOOD DECK	156		36.92	5,759
	F21	O	FPL 2S 1OP	1		9,298.80	9,299
	FIX	O	XTRA FIXTURES	3		2,248.07	6,744

TOTAL RCN	337,989

CONDITION ELEM	CD
EXTERIOR	A
INTERIOR	A
KITCHEN	A
BATHS	A
HEAT	A
ELECT	A

EFF.YR/AGE	1995 / 27		
COND	24	24 %	
FUNC	0		
ECON	0		
DEPR	24	% GD	76
RCNLD			$256,900