Key: 9613

Town of Bourne - Fiscal Year 2024

12/18/2023 6:02 pm SEQ #: 9,838

LEGAL

CURRENT OWNER	PARCEL ID	LOCATION
IMMONEN MICHAEL L &	43.4-76-0	23 HILL ST
BARTON LYNNE W		
10 OOLAH AVE		
NORWOOD, MA 02062		

TRANSFER HISTORY	DOS	T	SALE PRICE	BK-PG (Cert)
IMMONEN MICHAEL L &	06/08/2017	V	640,000	30543-141
ALEXANDER ROBERT B & BRUC	09/04/2008	F	1	23136-251
ALEXANDER ROBERT B	07/27/2007	F		22219-259

CLASS	CLASS%	DESCRIPTION	BN ID	BN	CARD
1010	100	SINGLE FAMILY		1	1 of 1

PMT NO	PMT DT	TY	DESC	AMOUNT	INSP	BY	1st	%
890626	10/17/1989	2	ADDITIONS	100,000	11/15/1991	HS	100	100
		13	OTHER				100	100

LAND

CD	T	AC/SF/UN	Nbhd	Infl1	N_Index	ADJ BASE	SAF	Topo	Lpi	VC	CREDIT AMT	ADJ VALUE
100	S	10,000	11 1.00	100 1.00	100 1.00	518,540	3.13	A 1.00	BA- 2.20			372,500

TOTAL	10,019 SF	ZONING	1	FRNT	0
Nbhd	POC	NOTE			
Infl1	AVG				
N_Index	AVG				

ASSESSED	CURRENT	PREVIOUS
LAND	372,500	329,700
BUILDING	491,400	434,900
DETACHED	0	0
OTHER	0	0
TOTAL	**863,900**	**764,600**

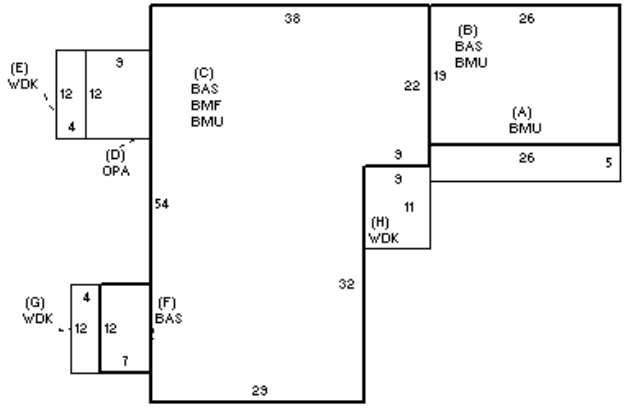

DETACHED

TY	QUAL	COND	DIM/NOTE	YB	UNITS	ADJ PRICE	RCNLD

PHOTO 06/10/2021

BLDG COMMENTS

BUILDING

BUILDING	CD	ADJ	DESC
MODEL	1		RESIDENTIAL
STYLE	1	0.95	RANCH [100%]
QUALITY	+	1.05	AVERAGE + [100%]
FRAME	1	1.00	WOOD FRAME [100%]

MEASURE	3/21/2017	TL
LIST	6/10/2021	EST
REVIEW	6/10/2021	TL

YEAR BLT	1990	SIZE ADJ	1.005
NET AREA	2,342	DETAIL ADJ	1.000
$NLA(RCN)	$266	OVERALL	1.030

CAPACITY	UNITS	ADJ
STORIES	1	1.00
ROOMS	3	1.00
BEDROOMS	1	1.00
BATHROOMS	1	1.00
FIXTURES	5	1.00
GARAGE CAPACITY	0	1.00
% BSMT FINISH	75	1.00
# OF HALF BATHS	0	1.00
# OF UNITS	1	1.00

ELEMENT	CD	DESCRIPTION	ADJ
FOUNDATION	4	FLR/WALL(FULL)	1.00
EXT COVER	1	WOOD SHINGLE	1.02
ROOF SHAPE	2	HIP	1.02
ROOF COVER	1	ASPH/COMP SHIN	1.00
FLOOR COVER	1	HARDWOOD	1.02
INT. FINISH	2	DRYWALL	1.00
HEATING/COOLING	2	HOT WATER	1.02
FUEL SOURCE	2	GAS	1.00
USE	0		1.00

S	BAT	T	DESCRIPTION	UNITS	YB	ADJ PRICE	RCN
+	BMU	N	BSMT UNFINISHED	2,388		31.23	74,580
C	BMF	N	BSMT FINISH	1,764		30.68	54,114
D	OPA	N	OPEN PORCH	108		74.57	8,054
+	WDK	N	WOOD DECK	195		38.02	7,414
+	BAS	L	BASE AREA	2,342	1990	186.80	437,486
	BMG	O	BSMT GARAGE	2		7,747.50	15,495
	FIX	O	XTRA FIXTURES	5		2,314.68	11,573
	JAC	O	JACUZZI	1		13,347.20	13,347

TOTAL RCN	622,063

CONDITION ELEM	CD
EXTERIOR	A
INTERIOR	A
KITCHEN	A
BATHS	A
HEAT	A
ELECT	A

EFF.YR/AGE	1998 / 24		
COND	21	21 %	
FUNC	0		
ECON	0		
DEPR	21	% GD	79
RCNLD			$491,400