Key: 9648

Town of Bourne - Fiscal Year 2024

12/18/2023 6:02 pm SEQ #: 9,877

LEGAL

CURRENT OWNER	PARCEL ID	LOCATION
SWEENEY MICHAEL JOHN JR & KAITLYNN RAFTERY 5 CHARTWELL DR BUZZARDS BAY, MA 02532	43.4-114-0	5 SWEENEY LN

TRANSFER HISTORY	DOS	T	SALE PRICE	BK-PG (Cert)
SWEENEY MICHAEL JOHN JR &	12/21/2021	F	100	34770-63
POUPOLO ANDREW, C FUNK,	10/02/2020	F	1	33325-86
GRINNELL VIRGINIA H ESTAT	02/03/2020	F	1	32665-132

CLASS	CLASS%	DESCRIPTION	BN ID	BN	CARD
1010	100	SINGLE FAMILY		1	1 of 1

PMT NO	PMT DT	TY	DESC	AMOUNT	INSP	BY	1st	%
B-21-288	08/09/2021	1	NEW CONSTRUC	1,233,410	08/31/2023	TL	100	100

LAND

CD	T	AC/SF/UN	Nbhd		Infl1		N_Index		ADJ BASE	SAF	Topo		Lpi		VC	CREDIT AMT	ADJ VALUE
100	S	40,000	11	1.00	100	1.00	100	1.00	247,485	1.00	A	1.00	R06	1.05			227,210
300	A	0.196	11	1.00	100	1.00	100	1.00	17,115	1.00	A	1.00	R06	1.05			3,350

TOTAL	1.114 Acres	ZONING	1	FRNT	0
Nbhd	POC	NOTE	PER PL BK 691 PG 40 DATED 7/19/2021 SQFT CHANGE		
Infl1	AVG				
N_Index	AVG				

ASSESSED	CURRENT	PREVIOUS
LAND	230,600	204,100
BUILDING	1,039,000	386,200
DETACHED	0	0
OTHER	0	0
TOTAL	**1,269,600**	**590,300**

DETACHED

TY	QUAL	COND	DIM/NOTE	YB	UNITS	ADJ PRICE	RCNLD

PHOTO 06/05/2023

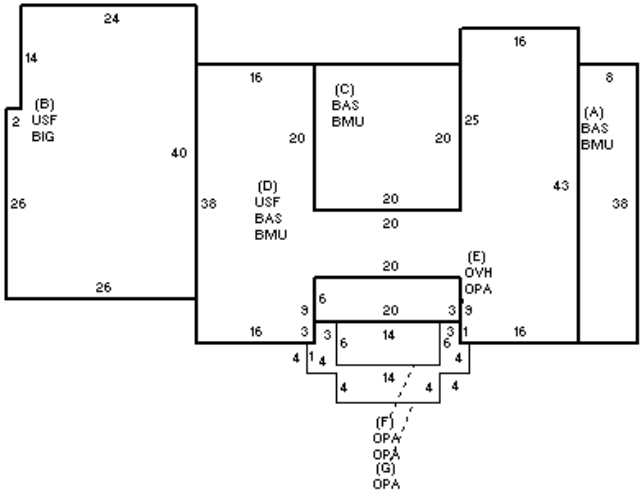

BUILDING

BUILDING	CD	ADJ	DESC
MODEL	1		RESIDENTIAL
STYLE	8	1.10	CONTEMPORARY [100%]
QUALITY	G	1.10	GOOD [100%]
FRAME	1	1.00	WOOD FRAME [100%]

MEASURE	3/22/2022	TL
LIST	7/5/2022	EST
REVIEW	6/5/2023	TL

BLDG COMMENTS

YEAR BLT	2022	SIZE ADJ	0.980
NET AREA	4,788	DETAIL ADJ	1.000
$NLA(RCN)	$217	OVERALL	1.190

CAPACITY	UNITS	ADJ
STORIES	2	1.00
ROOMS	11	1.00
BEDROOMS	4	1.00
BATHROOMS	3	1.00
FIXTURES	18	1.00
GARAGE CAPACITY	3	1.00
% BSMT FINISH	0	1.00
# OF HALF BATHS	1	1.00
# OF UNITS	1	1.00

ELEMENT	CD	DESCRIPTION	ADJ
FOUNDATION	4	FLR/WALL(FULL)	1.00
EXT COVER	1	WOOD SHINGLE	1.02
ROOF SHAPE	1	GABLE	1.00
ROOF COVER	1	ASPH/COMP SHIN	1.00
FLOOR COVER	1	HARDWOOD	1.02
INT. FINISH	1	PLASTER	1.00
HEATING/COOLING	11	HT WATER CL AIR	1.05
FUEL SOURCE	2	GAS	1.00
USE	0		1.00

S	BAT	T	DESCRIPTION	UNITS	YB	ADJ PRICE	RCN
+	BMU	N	BSMT UNFINISHED	2,180		36.86	80,357
+	BAS	L	BASE AREA	2,180	2022	220.47	480,625
B	BIG	N	BUILT-IN GARAGE	1,012		89.79	90,866
+	USF	L	UPPER STORY FIN	2,488	2022	111.14	276,525
+	OPA	N	OPEN PORCH	408		75.50	30,803
E	OVH	L	OVERHANG	120	2022	232.32	27,878
	FIX	O	XTRA FIXTURES	13		2,731.92	35,515
	GFP	O	GAS FIREPLACE	2		8,210.05	16,420

TOTAL RCN	1,038,989
CONDITION ELEM	CD
EXTERIOR	A
INTERIOR	A
KITCHEN	A
BATHS	A
HEAT	A
ELECT	A
EFF.YR/AGE	2022 / 0
COND	0 0 %
FUNC	0
ECON	0
DEPR	0 % GD 100
RCNLD	$1,039,000