Key: 9723

Town of Bourne - Fiscal Year 2024

12/18/2023 6:02 pm SEQ #: 9,958

LEGAL

CURRENT OWNER	PARCEL ID	LOCATION
GWYNN JOHN B ETUX SARAH GWYNN 4 FAIRWAY CIRCLE POCASSET, MA 02559	44.1-10-0	4 FAIRWAY CIR

TRANSFER HISTORY	DOS	T	SALE PRICE	BK-PG (Cert)
GWYNN JOHN B ETUX	05/23/2016	F	100	(209628)
GWYNN CHRISTOPHER A	05/23/2016	F	100	(209627)
GWYNN MICHAEL J TR	01/15/2014	F	100	(202488)

CLASS	CLASS%	DESCRIPTION	BN ID	BN	CARD
1010	100	SINGLE FAMILY		1	1 of 1

PMT NO	PMT DT	TY	DESC	AMOUNT	INSP	BY	1st	%
14494 -A	06/23/2014	3	ALT/RENO		09/03/2014		100	100
940605	12/16/1994	2	ADDITIONS	15,000	05/18/1995	JC	100	100

LAND

CD	T	AC/SF/UN	Nbhd	Infl1	N_Index	ADJ BASE	SAF	Topo	Lpi	VC	CREDIT AMT	ADJ VALUE
100	S	25,216	11 1.00	100 1.00	100 1.00	271,055	1.42	A 1.00	R08 1.15			222,170

TOTAL	25,221 SF	ZONING	1	FRNT	0
Nbhd	POC	NOTE			
Infl1	AVG				
N_Index	AVG				

ASSESSED	CURRENT	PREVIOUS
LAND	222,200	188,100
BUILDING	367,400	325,200
DETACHED	0	0
OTHER	0	0
TOTAL	**589,600**	**513,300**

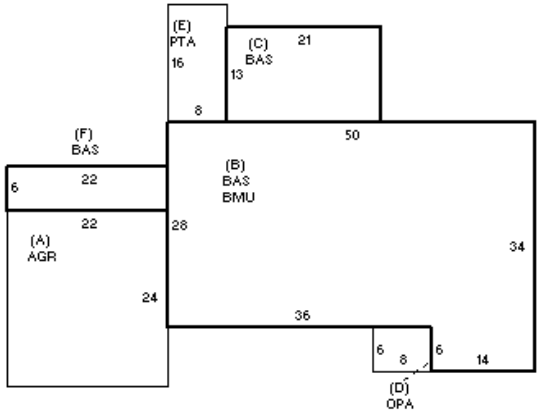

DETACHED

TY	QUAL	COND	DIM/NOTE	YB	UNITS	ADJ PRICE	RCNLD

PHOTO 05/04/2014

BLDG COMMENTS

BUILDING

BUILDING	CD	ADJ	DESC
MODEL	1		RESIDENTIAL
STYLE	1	0.95	RANCH [100%]
QUALITY	+	1.05	AVERAGE + [100%]
FRAME	1	1.00	WOOD FRAME [100%]

MEASURE	5/5/2014	TL
LIST	5/5/2014	TL
REVIEW	5/5/2014	TL

YEAR BLT	1975	SIZE ADJ	1.010
NET AREA	1,889	DETAIL ADJ	1.000
$NLA(RCN)	$253	OVERALL	1.020

CAPACITY	UNITS	ADJ
STORIES	1	1.00
ROOMS	6	1.00
BEDROOMS	3	1.00
BATHROOMS	3	1.00
FIXTURES	11	1.00
GARAGE CAPACITY	2	1.00
% BSMT FINISH	0	1.00
# OF HALF BATHS	0	1.00
# OF UNITS	1	1.00

ELEMENT	CD	DESCRIPTION	ADJ
FOUNDATION	4	FLR/WALL(FULL)	1.00
EXT COVER	2	CLAPBOARD	1.00
ROOF SHAPE	2	HIP	1.02
ROOF COVER	1	ASPH/COMP SHIN	1.00
FLOOR COVER	1	HARDWOOD	1.02
INT. FINISH	2	DRYWALL	1.00
HEATING/COOLING	9	WARM-COOL AIR	1.03
FUEL SOURCE	2	GAS	1.00
USE	0		1.00

S	BAT	T	DESCRIPTION	UNITS	YB	ADJ PRICE	RCN
A	AGR	N	ATT GARAGE	528		66.85	35,299
B	BMU	N	BSMT UNFINISHED	1,484		34.56	51,283
+	BAS	L	BASE AREA	1,889	1975	191.59	361,910
D	OPA	N	OPEN PORCH	48		88.14	4,231
E	PTA	N	PATIO	128		15.46	1,978
	F11	O	FPL 1S 1OP	1		8,673.20	8,673
	FIX	O	XTRA FIXTURES	6		2,303.68	13,822

TOTAL RCN	477,196

CONDITION ELEM	CD
EXTERIOR	A
INTERIOR	A
KITCHEN	A
BATHS	A
HEAT	A
ELECT	A

EFF.YR/AGE	1996 / 26		
COND	23	23 %	
FUNC	0		
ECON	0		
DEPR	23	% GD	77
RCNLD			$367,400