Key: 9976

Town of Bourne - Fiscal Year 2024

12/18/2023 6:02 pm SEQ #: 10,207

LEGAL

CURRENT OWNER	PARCEL ID	LOCATION
MOON PETER E & LORNA S MOON TRS MOON FAMILY NOMINEE TRUST 25 VESPER DR POCASSET, MA 02559	44.3-4-0	25 VESPER DR

TRANSFER HISTORY	DOS	T	SALE PRICE	BK-PG (Cert)
MOON PETER E & LORNA S MO	01/25/2005	G	1	(175730)
MOON PETER E &	04/28/1980	QS	67,350	(81566)

CLASS	CLASS%	DESCRIPTION	BN ID	BN	CARD
1010	100	SINGLE FAMILY		1	1 of 1

PMT NO	PMT DT	TY	DESC	AMOUNT	INSP	BY	1st	%
12830	11/16/2012	4	DETACH.STRUC	52,000	08/08/2013	DB	100	100
07189	04/20/2007	2	ADDITIONS	28,000	09/13/2007	JB	100	100
960209	05/16/1996	3	ALT/RENO	4,000	09/23/1997	JC	100	100
930207	05/12/1993	3	ALT/RENO	2,500	05/19/1994	JS	100	100
890652	10/24/1989	9	DECK	900	01/18/1990	HLD	100	100

LAND

CD	T	AC/SF/UN	Nbhd	Infl1	N_Index	ADJ BASE	SAF	Topo	Lpi	VC	CREDIT AMT	ADJ VALUE
100	S	29,676	11 1.00	100 1.00	100 1.00	271,055	1.25	A 1.00	R08 1.15			230,220

TOTAL	29,664 SF	ZONING	1	FRNT	0

Nbhd	POC
Infl1	AVG
N_Index	AVG

NOTE

ASSESSED	CURRENT	PREVIOUS
LAND	230,200	194,900
BUILDING	334,700	300,000
DETACHED	76,500	72,800
OTHER	0	0
TOTAL	**641,400**	**567,700**

DETACHED

TY	QUAL	COND	DIM/NOTE	YB	UNITS	ADJ PRICE	RCNLD
DGF	A 1.00	G 0.80	20X24		480	38.49	14,800
BBN	S 3.00	10 0.90	20X30	2012	600	114.29	61,700

PHOTO 09/27/2007

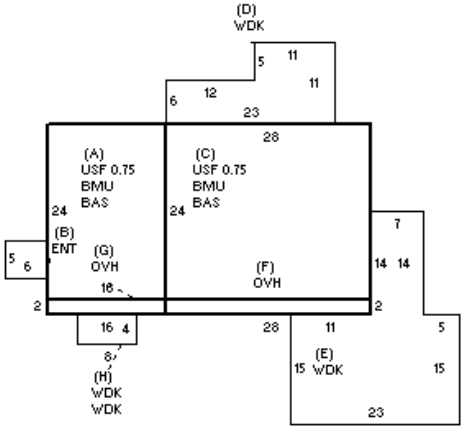

BLDG COMMENTS

BUILDING

BUILDING	CD	ADJ	DESC
MODEL	1		RESIDENTIAL
STYLE	4	1.05	CAPE [100%]
QUALITY	+	1.05	AVERAGE + [100%]
FRAME	1	1.00	WOOD FRAME [100%]

MEASURE	8/31/2021	RP
LIST	8/31/2021	EST
REVIEW	8/31/2021	RP

YEAR BLT	1981	SIZE ADJ	1.010
NET AREA	1,936	DETAIL ADJ	1.000
$NLA(RCN)	$225	OVERALL	1.110

CAPACITY	UNITS	ADJ
STORIES	1.75	1.00
ROOMS	6	1.00
BEDROOMS	3	1.00
BATHROOMS	2	1.00
FIXTURES	8	1.00
GARAGE CAPACITY	0	1.00
% BSMT FINISH	0	1.00
# OF HALF BATHS	0	1.00
# OF UNITS	1	1.00

ELEMENT	CD	DESCRIPTION	ADJ
FOUNDATION	4	FLR/WALL(FULL)	1.00
EXT COVER	1	WOOD SHINGLE	1.02
ROOF SHAPE	1	GABLE	1.00
ROOF COVER	1	ASPH/COMP SHIN	1.00
FLOOR COVER	1	HARDWOOD	1.02
INT. FINISH	2	DRYWALL	1.00
HEATING/COOLING	2	HOT WATER	1.02
FUEL SOURCE	2	GAS	1.00
USE	0		1.00

S	BAT	T	DESCRIPTION	UNITS	YB	ADJ PRICE	RCN
+	BAS	L	BASE AREA	1,056	1981	225.97	238,628
+	BMU	N	BSMT UNFINISHED	1,056		42.92	45,329
+	USF	L	UPPER STORY FIN	792	1981	128.00	101,373
B	ENT	N	ENCLOSED ENTRY	30		99.51	2,985
+	WDK	N	WOOD DECK	700		25.14	17,601
+	OVH	L	OVERHANG	88	1981	213.19	18,760
	FIX	O	XTRA FIXTURES	4		2,506.75	10,027

TOTAL RCN	434,703

CONDITION ELEM	CD
EXTERIOR	A
INTERIOR	A
KITCHEN	A
BATHS	A
HEAT	A
ELECT	A

EFF.YR/AGE	1996 / 26		
COND	23	23 %	
FUNC	0		
ECON	0		
DEPR	23	% GD	77
RCNLD			$334,700