Key: 1482

Town of BREWSTER - Fiscal Year 2025

9/17/2024 2:15 pm SEQ #: 1.616

LEGAL

CURRENT OWNER	PARCEL ID	LOCATION
HILL JAMES E & LINDA P O BOX 1574 BREWSTER, MA 02631	90-113-0	51 SEARS ROAD

TRANSFER HISTORY	DOS	T	SALE PRICE	BK-PG (Cert)
HILL JAMES E & LINDA	10/12/2005	F	1	20357-058
HILL JAMES E & BENEDETTO	05/23/1997	N	110,000	10762-343

CLASS	CLASS%	DESCRIPTION	BN ID	BN	CARD
1010	100	SINGLE FAMILY		1	1 of 1

PMT NO	PMT DT	TY	DESC	AMOUNT	INSP	BY	1st	%
NP		12	CYCLICAL NON		10/26/2007	JH	100	100

LAND

CD	T	AC/SF/UN	Nbhd	St Ind	Infl	ADJ BASE	SAF	Topo	Lpi	VC	CREDIT AMT	ADJ VALUE
100	S	17,600	6 1.00	A 1.00	A 1.00	767,200	2.46	A 1.00	R12 3.50			762,050

TOTAL	17,600 SF	ZONING	RM	FRNT	0
Nbhd	NBHD 6	NOTE			
St Ind	AVERAGE				
Infl	AVERAGE				

ASSESSED	CURRENT	PREVIOUS
LAND	762,100	575,200
BUILDING	270,400	255,300
DETACHED	400	400
OTHER	0	0
TOTAL	**1,032,900**	**830,900**

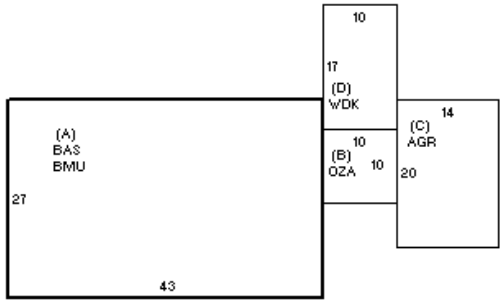

DETACHED

TY	QUAL	COND	DIM/NOTE	YB	UNITS	ADJ PRICE	RCNLD
SHM	L 0.80	50 0.50	8X8		64	12.84	400

PHOTO 12/02/2020

BLDG COMMENTS

BUILDING

BUILDING	CD	ADJ	DESC
MODEL	1		RESIDENTIAL
STYLE	1	1.00	RANCH [100%]
QUALITY	A	1.00	AVG [100%]
FRAME	1	1.00	WD FRAME [100%]

MEASURE	12/2/2020	NF
LIST	10/26/2007	JH
REVIEW	1/12/2021	MR

YEAR BLT	1967	SIZE ADJ	1.000
NET AREA	1,161	DETAIL ADJ	1.000
$NLA(RCN)	$348	OVERALL	1.000

CAPACITY	UNITS	ADJ
STORIES	1	1.00
ROOMS	5	1.00
BEDROOMS	3	1.00
BATHROOMS	1	1.00
FIXTURES	5	$6,500
GARAGE SPACES	0	1.00
% BSMT FIN	0	1.00
# 1/2 BATHS	0	1.00
# OF UNITS	1	1.00

ELEMENT	CD	DESCRIPTION	ADJ
FOUNDATION	4	FLR & WALL	1.00
EXT COVER	1	WD SHINGLE	1.00
ROOF SHAPE	1	GABLE	1.00
ROOF COVER	1	ASPH/CMP SH	1.00
FLOOR COVER	1	HARDWOOD	1.00
INT FINISH	2	DRYWALL	1.00
HEATING/COOL	1	FORCED AIR	1.00
FUEL SOURCE	1	OIL	1.00

S	BAT	T	DESCRIPTION	UNITS	YB	ADJ PRICE	RCN
A	BMU	N	BSMT UNFINISHED	1,161		56.46	65,554
A	BAS	L	BASE AREA	1,161	1967	253.89	294,772
B	OZA	N	OPEN BREEZEWAY	100		53.59	5,359
C	AGR	N	ATT GARAGE	280		43.10	12,068
D	WDK	N	WOOD DECK	170		39.20	6,664
	F11	O	FPL 1S 1OP	1		7,637.00	7,637
	MST	O	MAS/METAL STACK	1		5,027.00	5,027

TOTAL RCN	403,581

CONDITION ELEM	CD
EXTERIOR	A
INTERIOR	A
KITCHEN	A
BATHS	A
HEAT/ELEC	A

EFF.YR/AGE	1967 / 56	
COND	33	33 %
FUNC	0	
ECON	0	
DEPR	33	% GD 67
RCNLD		$270,400