Key: 1540

Town of BREWSTER - Fiscal Year 2025

9/17/2024 2:15 pm SEQ #: 1,676

LEGAL

CURRENT OWNER	PARCEL ID	LOCATION
MAGIERA JAMES A & SUSAN M 113 BEECH HILL ROAD MONT VERNON, NH 03057	79-76-0	130 FOSTER ROAD

TRANSFER HISTORY	DOS	T	SALE PRICE	BK-PG (Cert)
MAGIERA JAMES A & SUSAN M	11/25/1991	QS	139,900	7769-235

CLASS	CLASS%	DESCRIPTION	BN ID	BN	CARD
1010	100	SINGLE FAMILY		1	1 of 1

PMT NO	PMT DT	TY	DESC	AMOUNT	INSP	BY	1st	%
319	06/22/2011	2	ADD	16,850	03/06/2012	MR	100	100
408	08/19/2010	2	ADD	16,000	12/22/2010	JH	100	100
829	12/12/2007	7	ALTERATIONS	20,000	04/04/2009	JH	100	100
705	11/20/2003	7	ALTERATIONS	75,000	06/08/2004	WH	100	100
505	08/30/1995	2	ADD	6,600	02/28/1997	BC	100	100

LAND

CD	T	AC/SF/UN	Nbhd	St Ind	Infl	ADJ BASE	SAF	Topo	Lpi	VC	CREDIT AMT	ADJ VALUE
100	S	20,662	5 1.00	5-A 1.00	A 1.00	416,480	2.16	A 1.00	R10 1.90			426,180

TOTAL	20,662 SF	ZONING	RM	FRNT	0
Nbhd	NBHD 5	NOTE			
St Ind	CATHEDRAL RD				
Infl	AVERAGE				

ASSESSED	CURRENT	PREVIOUS
LAND	426,200	402,100
BUILDING	469,300	449,300
DETACHED	0	0
OTHER	0	0
TOTAL	**895,500**	**851,400**

DETACHED

TY	QUAL	COND	DIM/NOTE	YB	UNITS	ADJ PRICE	RCNLD

PHOTO 11/05/2020

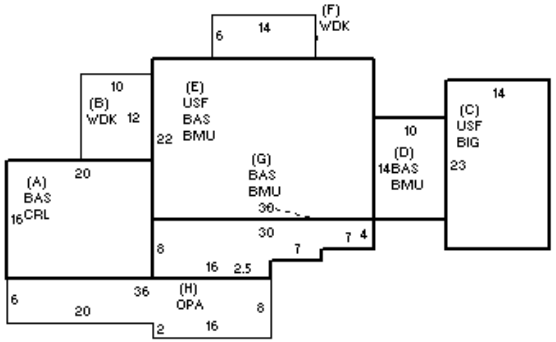

BUILDING

BUILDING	CD	ADJ	DESC
MODEL	1		RESIDENTIAL
STYLE	5	1.05	COLONIAL [100%]
QUALITY	A	1.00	AVG [100%]
FRAME	1	1.00	WD FRAME [100%]

MEASURE	11/5/2020	NF
LIST	11/5/2020	EST
REVIEW	1/5/2021	MR

BLDG COMMENTS

YEAR BLT	1961	SIZE ADJ	1.000
NET AREA	2,297	DETAIL ADJ	1.000
$NLA(RCN)	$288	OVERALL	1.050

CAPACITY	UNITS	ADJ
STORIES	2	1.00
ROOMS	7	1.00
BEDROOMS	3	1.00
BATHROOMS	2	1.00
FIXTURES	6	$8,190
GARAGE SPACES	1	1.00
% BSMT FIN	0	1.00
# 1/2 BATHS	0	1.00
# OF UNITS	1	1.00

ELEMENT	CD	DESCRIPTION	ADJ
FOUNDATION	4	FLR & WALL	1.00
EXT COVER	1	WD SHINGLE	1.00
ROOF SHAPE	1	GABLE	1.00
ROOF COVER	1	ASPH/CMP SH	1.00
FLOOR COVER	1	HARDWOOD	1.00
INT FINISH	2	DRYWALL	1.00
HEATING/COOL	2	HOT WATER	1.00
FUEL SOURCE	1	OIL	1.00

S	BAT	T	DESCRIPTION	UNITS	YB	ADJ PRICE	RCN
A	CRL	N	BSMT CRAWL	320		31.88	10,203
+	BAS	L	BASE AREA	1,315	1961	258.83	340,355
+	WDK	N	WOOD DECK	204		41.16	8,397
C	BIG	N	BUILT-IN GARAGE	322		56.90	18,323
C	USF	L	UPPER STORY FIN	322	2011	191.07	61,525
+	BMU	N	BSMT UNFINISHED	995		61.95	61,640
E	USF	L	UPPER STORY FIN	660	1961	191.07	126,107
H	OPA	N	OPEN PORCH	248		52.50	13,020
	F21	O	FPL 2S 1OP	1		10,658.60	10,659
	ODS	O	OUTDOOR SHOWER	1		2,535.80	2,536

TOTAL RCN	660,954
CONDITION ELEM	CD
EXTERIOR	G
INTERIOR	A
KITCHEN	A
BATHS	G
HEAT/ELEC	A
EFF.YR/AGE	1975 / 48
COND	29 29 %
FUNC	0
ECON	0
DEPR	29 % GD 71
RCNLD	$469,300