Key: **156**

Town of BREWSTER - Fiscal Year 2025

9/17/2024 2:15 pm SEQ #: 166

LEGAL

CURRENT OWNER	PARCEL ID	LOCATION
BENSON CRAIG R TRUSTEE **BENSON CAPE REALTY TRUST** **466 FRANCE AVENUE** **BRICK, NJ 08723**	**50-24-0**	**231 CEMETERY ROAD**

TRANSFER HISTORY	DOS	T	SALE PRICE	BK-PG (Cert)
BENSON CRAIG R TRUSTEE	10/08/2009	F	1	24085-38
BENSON SALLY T ETAL	07/16/2009	DC		23894-30&32
BENSON ROBERT O & SALLY T	02/12/2002	A	10	14808-217

CLASS	CLASS%	DESCRIPTION	BN ID	BN	CARD
1010	**100**	**SINGLE FAMILY**		**1**	**1 of 1**

PMT NO	PMT DT	TY	DESC	AMOUNT	INSP	BY	1st	%
321	05/22/2006	6	DEMO	3,000	07/10/2007	JH	100	100
322	05/22/2006	1	NEW CONSTRUC	300,000	07/10/2007	JH	100	100

LAND

CD	T	AC/SF/UN	Nbhd	St Ind	Infl	ADJ BASE	SAF	Topo	Lpi	VC	CREDIT AMT	ADJ VALUE
100	S	10,736	3 1.00	A 1.00	A 1.00	964,480	3.77	A 1.00	BG- 4.40			895,740

TOTAL	10,736 SF	ZONING	RM	FRNT	0
Nbhd	NBHD 3	NOTE			
St Ind	AVERAGE				
Infl	AVERAGE				

ASSESSED	CURRENT	PREVIOUS
LAND	895,700	845,100
BUILDING	648,500	619,500
DETACHED	0	0
OTHER	0	0
TOTAL	**1,544,200**	**1,464,600**

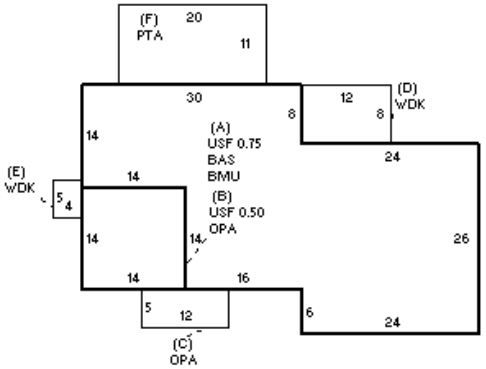

DETACHED

TY	QUAL	COND	DIM/NOTE	YB	UNITS	ADJ PRICE	RCNLD

PHOTO 06/21/2018

BUILDING

BUILDING	CD	ADJ	DESC
MODEL	1		RESIDENTIAL
STYLE	5	1.05	COLONIAL [100%]
QUALITY	A+	1.20	AVG + [100%]
FRAME	1	1.00	WD FRAME [100%]

MEASURE	6/21/2018	NF
LIST	7/3/2018	NF
REVIEW	7/23/2018	MR

BLDG COMMENTS

HATCH TO ATTIC

YEAR BLT	2006	SIZE ADJ	1.000
NET AREA	2,317	DETAIL ADJ	1.000
$NLA(RCN)	$325	OVERALL	1.050

CAPACITY	UNITS	ADJ
STORIES	1.75	1.00
ROOMS	7	1.00
BEDROOMS	4	1.00
BATHROOMS	2	1.00
FIXTURES	7	$11,466
GARAGE SPACES	0	1.00
% BSMT FIN	0	1.00
# 1/2 BATHS	0	1.00
# OF UNITS	1	1.00

ELEMENT	CD	DESCRIPTION	ADJ
FOUNDATION	4	FLR & WALL	1.00
EXT COVER	1	WD SHINGLE	1.00
ROOF SHAPE	1	GABLE	1.00
ROOF COVER	1	ASPH/CMP SH	1.00
FLOOR COVER	1	HARDWOOD	1.00
INT FINISH	2	DRYWALL	1.00
HEATING/COOL	2	HOT WATER	1.00
FUEL SOURCE	2	GAS	1.00

S	BAT	T	DESCRIPTION	UNITS	YB	ADJ PRICE	RCN
A	BMU	N	BSMT UNFINISHED	1,268		68.47	86,817
A	BAS	L	BASE AREA	1,268	2006	310.59	393,828
+	USF	L	UPPER STORY FIN	1,049	2006	222.19	233,081
+	OPA	N	OPEN PORCH	256		63.00	16,128
+	WDK	N	WOOD DECK	116		49.39	5,729
F	PTA	N	PATIO	220		18.03	3,967
	ODS	O	OUTDOOR SHOWER	1		3,042.90	3,043

TOTAL RCN	754,058

CONDITION ELEM	CD
EXTERIOR	A
INTERIOR	A
KITCHEN	A
BATHS	A
HEAT/ELEC	A

EFF.YR/AGE	2006 / 17	
COND	14	14 %
FUNC	0	
ECON	0	
DEPR	14	% GD 86
RCNLD		$648,500