Key: 1605

Town of BREWSTER - Fiscal Year 2025

9/17/2024 2:15 pm SEQ #: 1,743

LEGAL

CURRENT OWNER	PARCEL ID	LOCATION
RITTER DWIGHT S TRUSTEE & RITTER JO ANN M TRUSTEE 21 FOSTER ROAD BREWSTER, MA 02631	78-50-0	21 FOSTER ROAD

TRANSFER HISTORY	DOS	T	SALE PRICE	BK-PG (Cert)
RITTER DWIGHT S TRUSTEE &	06/13/2012	F	1	26409-214
RITTER DWIGHT S & JO ANN	09/11/2001	F	1	14221-035
RITTER DWIGHT S & JO ANN	12/12/1990	A	100	7382-049

CLASS	CLASS%	DESCRIPTION	BN ID	BN	CARD
1010	100	SINGLE FAMILY		1	1 of 1

PMT NO	PMT DT	TY	DESC	AMOUNT	INSP	BY	1st	%
468	07/30/2020	7	ALTERATIONS	7,135	12/16/2020	NF	100	100
	10/25/2018	30	ABATEMENT RE		10/25/2018	JMG	100	100
839	10/14/2014	7	ALTERATIONS	2,000	06/12/2015	MW	100	100
SS2013		13	SPLIT/SUB/LA		12/31/2011		100	100
NP		12	CYCLICAL NON		09/19/2007	JH	100	100

LAND

CD	T	AC/SF/UN	Nbhd	St Ind	Infl	ADJ BASE	SAF	Topo	Lpi	VC	CREDIT AMT	ADJ VALUE
100	S	29,238	5 1.00	5-A 1.00	A 1.00	416,480	1.65	A 1.00	R10 1.90			460,050

TOTAL	29,238 SF	ZONING	VB	FRNT	0
Nbhd	NBHD 5	NOTE	FOR FY 13 NOW INCLUDES ADDITIONAL PARCELS IN 2012 DEED, FROM 2005 DEED 9267/305		
St Ind	CATHEDRAL RD				
Infl	AVERAGE				

ASSESSED	CURRENT	PREVIOUS
LAND	460,100	434,000
BUILDING	635,100	599,800
DETACHED	2,300	2,300
OTHER	0	0
TOTAL	**1,097,500**	**1,036,100**

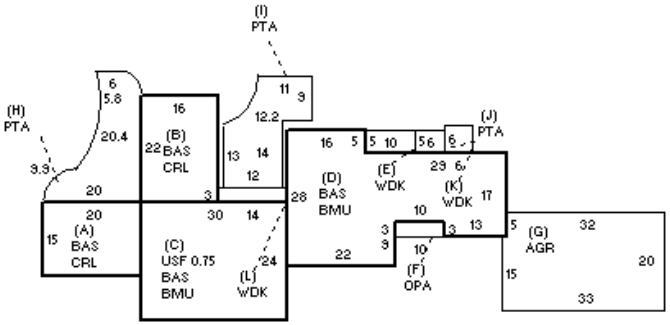

DETACHED

TY	QUAL	COND	DIM/NOTE	YB	UNITS	ADJ PRICE	RCNLD
SHF	A 1.00	50 0.50	10X14		140	21.39	1,500
PTD	A 1.00	50 0.50	14X14		196	8.55	800

PHOTO 12/16/2020

BLDG COMMENTS

1 Extra Fix/1 Full Bath = 4 Fix

BUILDING

BUILDING	CD	ADJ	DESC
MODEL	1		RESIDENTIAL
STYLE	4	1.02	CAPE [100%]
QUALITY	A+	1.20	AVG + [100%]
FRAME	1	1.00	WD FRAME [100%]

MEASURE	10/25/2018	JMG
LIST	10/25/2018	JMG
REVIEW	1/25/2021	MR

YEAR BLT	1920	SIZE ADJ	0.990
NET AREA	2,859	DETAIL ADJ	1.000
$NLA(RCN)	$337	OVERALL	1.020

CAPACITY	UNITS	ADJ
STORIES	1.75	1.00
ROOMS	10	1.00
BEDROOMS	4	1.00
BATHROOMS	2	1.00
FIXTURES	11	$17,503
GARAGE SPACES	2	1.00
% BSMT FIN	0	1.00
# 1/2 BATHS	1	1.00
# OF UNITS	1	1.00

ELEMENT	CD	DESCRIPTION	ADJ
FOUNDATION	4	FLR & WALL	1.00
EXT COVER	1	WD SHINGLE	1.00
ROOF SHAPE	1	GABLE	1.00
ROOF COVER	1	ASPH/CMP SH	1.00
FLOOR COVER	1	HARDWOOD	1.00
INT FINISH	2	DRYWALL	1.00
HEATING/COOL	2	HOT WATER	1.00
FUEL SOURCE	1	OIL	1.00

S	BAT	T	DESCRIPTION	UNITS	YB	ADJ PRICE	RCN
A	CRL	N	BSMT CRAWL	300		36.79	11,038
+	BAS	L	BASE AREA	1,372	1920	268.83	368,833
B	CRL	N	BSMT CRAWL	352		36.79	12,951
+	BMU	N	BSMT UNFINISHED	1,667		61.99	103,329
C	USF	L	UPPER STORY FIN	540	1920	225.05	121,529
D	BAS	L	BASE AREA	947	1995	268.83	254,581
+	WDK	N	WOOD DECK	128		47.50	6,081
F	OPA	N	OPEN PORCH	30		60.59	1,818
G	AGR	N	ATT GARAGE	655		44.91	29,419
H	PTA	N	PATIO	311		16.38	5,093
I	PTA	N	PATIO	278		17.34	4,820
J	PTA	N	PATIO	30		27.95	839
	F11	O	FPL 1S 1OP	1		9,254.20	9,254
	F21	O	FPL 2S 1OP	1		12,300.60	12,301
	ODS	O	OUTDOOR SHOWER	1		2,926.40	2,926

TOTAL RCN	962,315

CONDITION ELEM	CD
EXTERIOR	A
INTERIOR	A
KITCHEN	G
BATHS	G
HEAT/ELEC	G

EFF.YR/AGE	1965 / 58		
COND	34	34 %	
FUNC	0		
ECON	0		
DEPR	34	% GD	66
RCNLD	$635,100		