Key: 1742

Town of BREWSTER - Fiscal Year 2025

9/17/2024 2:15 pm SEQ #: 1,877

LEGAL

CURRENT OWNER	PARCEL ID	LOCATION
COLE EDWARD B TRUSTEE EDWRD B COLE LIVING TRUST AGREEMENT 46 CATHEDRAL ROAD BREWSTER, MA 02631	68-94-0	46 CATHEDRAL ROAD

TRANSFER HISTORY	DOS	T	SALE PRICE	BK-PG (Cert)
COLE EDWARD B TRUSTEE	12/19/2023	A	100	36141-328
COLE DEBORAH C TRUSTEE	02/07/2011	F	1	25242-19
COLE EDWARD B & DEBORAH C	08/31/1995	QS	78,000	9823-323

CLASS	CLASS%	DESCRIPTION	BN ID	BN	CARD
1010	100	SINGLE FAMILY		1	1 of 1

PMT NO	PMT DT	TY	DESC	AMOUNT	INSP	BY	1st	%
266	05/25/2011	2	ADD	22,000	03/06/2012	MR	100	100
639	10/29/2004	1	NEW CONSTRUC	450,000	04/25/2005	JB	100	100

LAND

CD	T	AC/SF/UN	Nbhd	St Ind	Infl	ADJ BASE	SAF	Topo	Lpi	VC	CREDIT AMT	ADJ VALUE
100	S	50,094	5 1.00	5-A 1.00	A 1.00	416,480	1.13	A 1.00	R10 1.90			543,180

TOTAL	1.150 Acres	ZONING	RM	FRNT	0
Nbhd	NBHD 5	NOTE			
St Ind	CATHEDRAL RD				
Infl	AVERAGE				

ASSESSED	CURRENT	PREVIOUS
LAND	543,200	512,500
BUILDING	973,300	929,900
DETACHED	0	0
OTHER	0	0
TOTAL	**1,516,500**	**1,442,400**

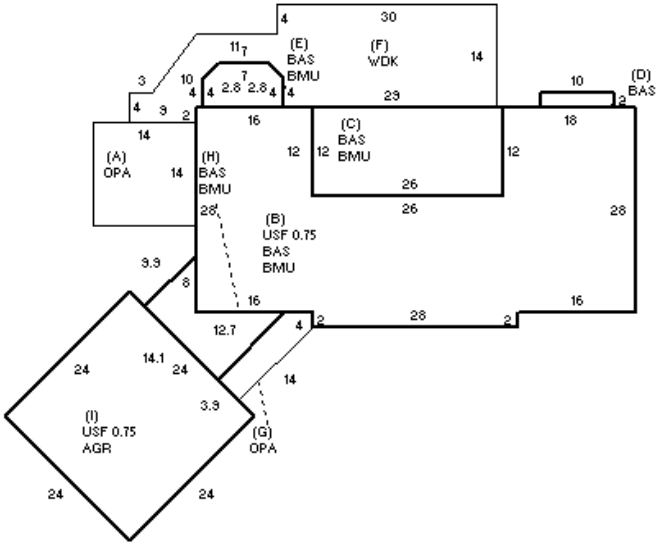

DETACHED

TY	QUAL	COND	DIM/NOTE	YB	UNITS	ADJ PRICE	RCNLD

PHOTO 11/11/2020

BUILDING

BUILDING	CD	ADJ	DESC
MODEL	1		RESIDENTIAL
STYLE	4	1.02	CAPE [100%]
QUALITY	G	1.30	GOOD [100%]
FRAME	1	1.00	WD FRAME [100%]

MEASURE	11/11/2020	NF
LIST	7/3/2007	JH
REVIEW	1/7/2021	MR

BLDG COMMENTS

EXTRA SINK

YEAR BLT	2004	SIZE ADJ	0.980
NET AREA	3,430	DETAIL ADJ	1.000
$NLA(RCN)	$334	OVERALL	1.050

CAPACITY	UNITS	ADJ
STORIES	1.75	1.00
ROOMS	8	1.00
BEDROOMS	4	1.00
BATHROOMS	3	1.00
FIXTURES	10	$17,745
GARAGE SPACES	2	1.00
% BSMT FIN	0	1.00
# 1/2 BATHS	0	1.00
# OF UNITS	1	1.00

ELEMENT	CD	DESCRIPTION	ADJ
FOUNDATION	4	FLR & WALL	1.00
EXT COVER	1	WD SHINGLE	1.00
ROOF SHAPE	1	GABLE	1.00
ROOF COVER	1	ASPH/CMP SH	1.00
FLOOR COVER	1	HARDWOOD	1.00
INT FINISH	2	DRYWALL	1.00
HEATING/COOL	9	WARM/CL AIR	1.03
FUEL SOURCE	2	GAS	1.00

S	BAT	T	DESCRIPTION	UNITS	YB	ADJ PRICE	RCN
+	OPA	N	OPEN PORCH	254		66.89	16,989
+	BMU	N	BSMT UNFINISHED	1,910		66.69	127,380
+	USF	L	UPPER STORY FIN	1,500	2004	215.82	323,729
C	BAS	L	BASE AREA	312	2004	303.36	94,649
+	BAS	L	BASE AREA	1,618	2004	303.36	490,842
F	WDK	N	WOOD DECK	528		52.44	27,688
I	AGR	N	ATT GARAGE	576		50.74	29,225
	F21	O	FPL 2S 1OP	1		13,579.00	13,579
	GEN	O	GENERATOR	1		0.00	
	ODS	O	OUTDOOR SHOWER	1		3,230.50	3,231

TOTAL RCN	1,145,056

CONDITION ELEM	CD
EXTERIOR	A
INTERIOR	A
KITCHEN	A
BATHS	A
HEAT/ELEC	A

EFF.YR/AGE	2004 / 19	
COND	15	15 %
FUNC	0	
ECON	0	
DEPR	15	% GD 85
RCNLD		$973,300