Key: 2252

Town of BREWSTER - Fiscal Year 2025

9/17/2024 2:15 pm SEQ #: 2,405

LEGAL

CURRENT OWNER	PARCEL ID	LOCATION
STANDFAST FARMS LLC C/O SARAH STRANAHAN 790 MAIN STREET BREWSTER, MA 02631	26-45-0	810 MAIN STREET

TRANSFER HISTORY	DOS	T	SALE PRICE	BK-PG (Cert)
STANDFAST FARMS LLC	11/05/2015	QS	350,000	29255-225
WHERITY P NICOLAS & ROSAL	11/04/2015	F		29251-1
WHERITY P NICOLAS & ROSAL	05/04/2005	F	1	19794-50

CLASS	CLASS%	DESCRIPTION	BN ID	BN	CARD
1090	100	MULTIPLE HSES	810	1	1 of 5

PMT NO	PMT DT	TY	DESC	AMOUNT	INSP	BY	1st	%
SR-24-12	05/14/2024	3	OUT BUILDING	2,982			0	0
SR-24-13	05/14/2024	3	OUT BUILDING	2,982			0	0
SR-24-14	05/14/2024	3	OUT BUILDING	2,982			0	0
702	08/13/2018	1	NEW CONSTRUC	150,000	07/16/2020	NF	100	100
703	08/13/2018	1	NEW CONSTRUC	150,000	07/16/2020	NF	100	100

LAND

CD	T	AC/SF/UN	Nbhd	St Ind	Infl	ADJ BASE	SAF	Topo	Lpi	VC	CREDIT AMT	ADJ VALUE
100	S	33,022	10 1.00	36 1.00	A 1.00	219,200	1.50	A 1.00	R03 1.00			249,940

TOTAL	33,022 SF	ZONING	RM	FRNT	0

Nbhd	NBHD 10
St Ind	DENNIS-PAINES C
Infl	AVERAGE

NOTE: FY19 State Class to 1090

ASSESSED	CURRENT	PREVIOUS
LAND	249,900	235,800
BUILDING	233,400	220,400
DETACHED	200	200
OTHER	547,300	522,200
TOTAL	**1,030,800**	**978,600**

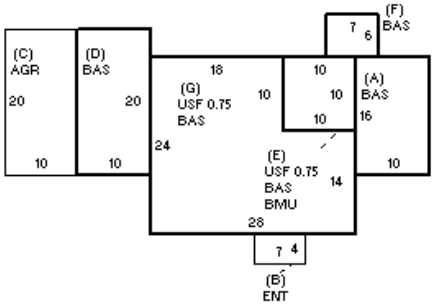

DETACHED

TY	QUAL	COND	DIM/NOTE	YB	UNITS	ADJ PRICE	RCNLD
SW2	A 1.00	10 0.90	2 X 3		6	40.60	200

PHOTO 07/16/2020

BLDG COMMENTS
Main House #810
SOLAR PANELS

BUILDING

BUILDING	CD	ADJ	DESC
MODEL	1		RESIDENTIAL
STYLE	4	1.02	CAPE [100%]
QUALITY	A-	0.90	MINUS AVE [100%]
FRAME	1	1.00	WD FRAME [100%]

MEASURE	7/18/2019	NF
LIST	7/18/2019	NF
REVIEW	7/23/2020	MR

YEAR BLT	1946	SIZE ADJ	1.000
NET AREA	1,578	DETAIL ADJ	1.000
$NLA(RCN)	$239	OVERALL	1.020

CAPACITY	UNITS	ADJ
STORIES	1.75	1.00
ROOMS	6	1.00
BEDROOMS	2	1.00
BATHROOMS	1	1.00
FIXTURES	5	$5,967
GARAGE SPACES	1	1.00
% BSMT FIN	0	1.00
# 1/2 BATHS	1	1.00
# OF UNITS	1	1.00

ELEMENT	CD	DESCRIPTION	ADJ
FOUNDATION	5	OTHER	1.00
EXT COVER	1	WD SHINGLE	1.00
ROOF SHAPE	1	GABLE	1.00
ROOF COVER	1	ASPH/CMP SH	1.00
FLOOR COVER	2	SOFTWOOD	1.00
INT FINISH	2	DRYWALL	1.00
HEATING/COOL	2	HOT WATER	1.00
FUEL SOURCE	1	OIL	1.00

S	BAT	T	DESCRIPTION	UNITS	YB	ADJ PRICE	RCN
+	BAS	L	BASE AREA	1,074	1946	239.86	257,614
B	ENT	N	ENCLOSED ENTRY	28		119.01	3,332
C	AGR	N	ATT GARAGE	200		41.15	8,230
E	BMU	N	BSMT UNFINISHED	100		61.37	6,137
+	USF	L	UPPER STORY FIN	504	1946	170.49	85,929
	F21	O	FPL 2S 1OP	1		9,318.60	9,319

TOTAL RCN 376,528

CONDITION ELEM	CD
EXTERIOR	G
INTERIOR	A
KITCHEN	A
BATHS	A
HEAT/ELEC	A

EFF.YR/AGE 1957 / 66

COND	38	38 %	
FUNC	0		
ECON	0		
DEPR	38	% GD	62

RCNLD $233,400

Key: 2252

Town of BREWSTER - Fiscal Year 2025

9/17/2024 2:15 pm SEQ #: 2,406

LEGAL

CURRENT OWNER	PARCEL ID	LOCATION
STANDFAST FARMS LLC C/O SARAH STRANAHAN 790 MAIN STREET BREWSTER, MA 02631	26-45-0	810 MAIN STREET

TRANSFER HISTORY	DOS	T	SALE PRICE	BK-PG (Cert)

CLASS	CLASS%	DESCRIPTION	BN ID	BN	CARD
1090	100	MULTIPLE HSES	UNIT1	2	2 of 5

PMT NO	PMT DT	TY	DESC	AMOUNT	INSP	BY	1st	%

LAND

CD	T	AC/SF/UN	Nbhd	St Ind	Infl	ADJ BASE	SAF	Topo	Lpi	VC	CREDIT AMT	ADJ VALUE

TOTAL		ZONING	FRNT
Nbhd		NOTE	
St Ind			
Infl			

ASSESSED	CURRENT	PREVIOUS
LAND		
BUILDING	170,500	
DETACHED		
OTHER		
TOTAL		

DETACHED

TY	QUAL	COND	DIM/NOTE	YB	UNITS	ADJ PRICE	RCNLD

PHOTO 07/16/2020

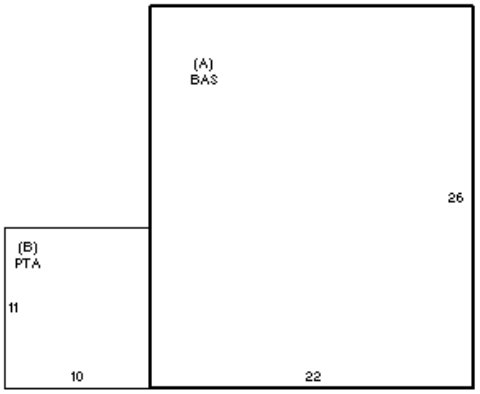

BUILDING

BUILDING	CD	ADJ	DESC
MODEL	1		RESIDENTIAL
STYLE	6	1.05	COTT/BUNGLW [100%]
QUALITY	A	1.00	AVG [100%]
FRAME	1	1.00	WD FRAME [100%]

MEASURE	7/18/2019	NF
LIST	7/18/2019	NF
REVIEW	7/23/2020	MR

BLDG COMMENTS

Unit 1, closest to 6a
PINE CONE
PULL DOWN

YEAR BLT	2018	SIZE ADJ	1.000
NET AREA	572	DETAIL ADJ	1.000
$NLA(RCN)	$314	OVERALL	1.010

CAPACITY	UNITS	ADJ
STORIES	1	1.00
ROOMS	3	1.00
BEDROOMS	1	1.00
BATHROOMS	1	1.00
FIXTURES	3	$3,939
GARAGE SPACES	0	1.00
% BSMT FIN	0	1.00
# 1/2 BATHS	0	1.00
# OF UNITS	1	1.00

ELEMENT	CD	DESCRIPTION	ADJ
FOUNDATION	1	PIER	1.00
EXT COVER	2	CLAPBOARD	1.00
ROOF SHAPE	1	GABLE	1.00
ROOF COVER	1	ASPH/CMP SH	1.00
FLOOR COVER	1	HARDWOOD	1.00
INT FINISH	2	DRYWALL	1.00
HEATING/COOL	14	ELECT BB+AC	1.01
FUEL SOURCE	3	ELECTRIC	0.95

S	BAT	T	DESCRIPTION	UNITS	YB	ADJ PRICE	RCN
A	BAS	L	BASE AREA	572	2018	303.74	173,738
B	PTA	N	PATIO	110		16.06	1,767

TOTAL RCN	179,444
CONDITION ELEM	CD
EXTERIOR	A
INTERIOR	A
KITCHEN	A
BATHS	A
HEAT/ELEC	A

EFF.YR/AGE	2018 / 5		
COND	5	5 %	
FUNC	0		
ECON	0		
DEPR	5	% GD	95
RCNLD			$170,500

Key: 2252

Town of BREWSTER - Fiscal Year 2025

9/17/2024 2:15 pm SEQ #: 2,407

LEGAL

CURRENT OWNER	PARCEL ID	LOCATION
STANDFAST FARMS LLC C/O SARAH STRANAHAN 790 MAIN STREET BREWSTER, MA 02631	26-45-0	810 MAIN STREET

TRANSFER HISTORY	DOS	T	SALE PRICE	BK-PG (Cert)

CLASS	CLASS%	DESCRIPTION	BN ID	BN	CARD
1090	100	MULTIPLE HSES	UNIT2	3	3 of 5

PMT NO	PMT DT	TY	DESC	AMOUNT	INSP	BY	1st	%

LAND

CD	T	AC/SF/UN	Nbhd	St Ind	Infl	ADJ BASE	SAF	Topo	Lpi	VC	CREDIT AMT	ADJ VALUE

TOTAL		ZONING	FRNT
Nbhd		NOTE	
St Ind			
Infl			

ASSESSED	CURRENT	PREVIOUS
LAND		
BUILDING	170,500	
DETACHED		
OTHER		
TOTAL		

DETACHED

TY	QUAL	COND	DIM/NOTE	YB	UNITS	ADJ PRICE	RCNLD

PHOTO 07/16/2020

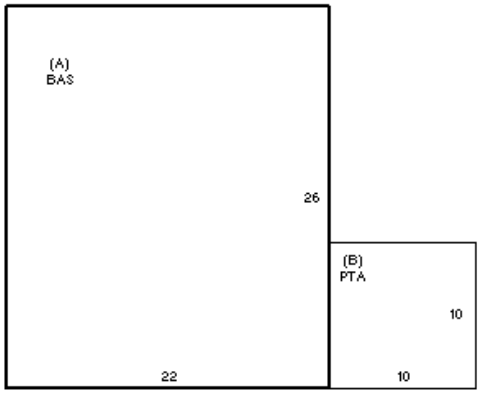

BUILDING

BUILDING	CD	ADJ	DESC
MODEL	1		RESIDENTIAL
STYLE	6	1.05	COTT/BUNGLW [100%]
QUALITY	A	1.00	AVG [100%]
FRAME	1	1.00	WD FRAME [100%]

MEASURE	7/18/2019	NF
LIST	7/18/2019	NF
REVIEW	7/23/2020	MR

BLDG COMMENTS

Unit 2
PINE WOOD - MIDDLE COTTAGE
PULL DOWN

YEAR BLT	2018	SIZE ADJ	1.000
NET AREA	572	DETAIL ADJ	1.000
$NLA(RCN)	$314	OVERALL	1.010

CAPACITY	UNITS	ADJ
STORIES	1	1.00
ROOMS	3	1.00
BEDROOMS	1	1.00
BATHROOMS	1	1.00
FIXTURES	3	$3,939
GARAGE SPACES	0	1.00
% BSMT FIN	0	1.00
# 1/2 BATHS	0	1.00
# OF UNITS	1	1.00

ELEMENT	CD	DESCRIPTION	ADJ
FOUNDATION	1	PIER	1.00
EXT COVER	2	CLAPBOARD	1.00
ROOF SHAPE	1	GABLE	1.00
ROOF COVER	1	ASPH/CMP SH	1.00
FLOOR COVER	1	HARDWOOD	1.00
INT FINISH	2	DRYWALL	1.00
HEATING/COOL	14	ELECT BB+AC	1.01
FUEL SOURCE	3	ELECTRIC	0.95

S	BAT	T	DESCRIPTION	UNITS	YB	ADJ PRICE	RCN
A	BAS	L	BASE AREA	572	2018	303.74	173,738
B	PTA	N	PATIO	100		18.47	1,847

TOTAL RCN	179,525

CONDITION ELEM	CD
EXTERIOR	A
INTERIOR	A
KITCHEN	A
BATHS	A
HEAT/ELEC	A

EFF.YR/AGE	2018 / 5	
COND	5 5 %	
FUNC	0	
ECON	0	
DEPR	5	% GD 95
RCNLD		$170,500

Key: 2252

Town of BREWSTER - Fiscal Year 2025

9/17/2024 2:15 pm SEQ #: 2,408

LEGAL

CURRENT OWNER	PARCEL ID	LOCATION
STANDFAST FARMS LLC C/O SARAH STRANAHAN 790 MAIN STREET BREWSTER, MA 02631	26-45-0	810 MAIN STREET

TRANSFER HISTORY	DOS	T	SALE PRICE	BK-PG (Cert)

CLASS	CLASS%	DESCRIPTION	BN ID	BN	CARD
1090	100	MULTIPLE HSES	UNIT3	4	4 of 5

PMT NO	PMT DT	TY	DESC	AMOUNT	INSP	BY	1st	%

LAND

CD	T	AC/SF/UN	Nbhd	St Ind	Infl	ADJ BASE	SAF	Topo	Lpi	VC	CREDIT AMT	ADJ VALUE

TOTAL		ZONING	FRNT
Nbhd		NOTE	
St Ind			
Infl			

ASSESSED	CURRENT	PREVIOUS
LAND		
BUILDING	170,500	
DETACHED		
OTHER		
TOTAL		

DETACHED

TY	QUAL	COND	DIM/NOTE	YB	UNITS	ADJ PRICE	RCNLD

PHOTO 07/16/2020

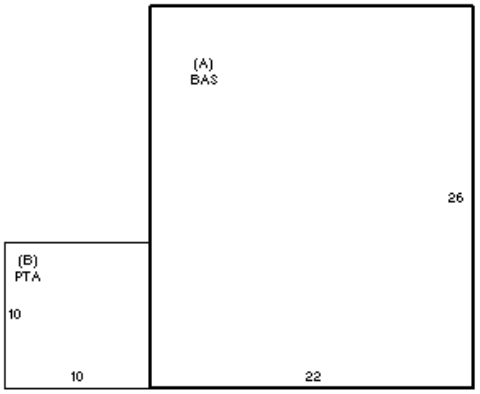

BLDG COMMENTS

Unit 3
PINE BOUGH

BUILDING

BUILDING	CD	ADJ	DESC
MODEL	1		RESIDENTIAL
STYLE	6	1.05	COTT/BUNGLW [100%]
QUALITY	A	1.00	AVG [100%]
FRAME	1	1.00	WD FRAME [100%]

MEASURE	7/18/2019	NF
LIST	7/18/2019	NF
REVIEW	7/23/2020	MR

YEAR BLT	2018	SIZE ADJ	1.000
NET AREA	572	DETAIL ADJ	1.000
$NLA(RCN)	$314	OVERALL	1.010

CAPACITY	UNITS	ADJ
STORIES	1	1.00
ROOMS	3	1.00
BEDROOMS	1	1.00
BATHROOMS	1	1.00
FIXTURES	3	$3,939
GARAGE SPACES	0	1.00
% BSMT FIN	0	1.00
# 1/2 BATHS	0	1.00
# OF UNITS	1	1.00

ELEMENT	CD	DESCRIPTION	ADJ
FOUNDATION	1	PIER	1.00
EXT COVER	2	CLAPBOARD	1.00
ROOF SHAPE	1	GABLE	1.00
ROOF COVER	1	ASPH/CMP SH	1.00
FLOOR COVER	1	HARDWOOD	1.00
INT FINISH	2	DRYWALL	1.00
HEATING/COOL	14	ELECT BB+AC	1.01
FUEL SOURCE	3	ELECTRIC	0.95

S	BAT	T	DESCRIPTION	UNITS	YB	ADJ PRICE	RCN
A	BAS	L	BASE AREA	572	2018	303.74	173,738
B	PTA	N	PATIO	100		18.47	1,847

TOTAL RCN	179,525
CONDITION ELEM	CD
EXTERIOR	A
INTERIOR	A
KITCHEN	A
BATHS	A
HEAT/ELEC	A

EFF.YR/AGE	2018 / 5		
COND	5	5 %	
FUNC	0		
ECON	0		
DEPR	5	% GD	95
RCNLD			$170,500

Key: 2252

Town of BREWSTER - Fiscal Year 2025

9/17/2024 2:15 pm SEQ #: 2,409

LEGAL

CURRENT OWNER	PARCEL ID	LOCATION
STANDFAST FARMS LLC C/O SARAH STRANAHAN 790 MAIN STREET BREWSTER, MA 02631	26-45-0	810 MAIN STREET

TRANSFER HISTORY	DOS	T	SALE PRICE	BK-PG (Cert)

CLASS	CLASS%	DESCRIPTION	BN ID	BN	CARD
1090	100	MULTIPLE HSES	UNIT4	5	5 of 5

PMT NO	PMT DT	TY	DESC	AMOUNT	INSP	BY	1st	%

LAND

CD	T	AC/SF/UN	Nbhd	St Ind	Infl	ADJ BASE	SAF	Topo	Lpi	VC	CREDIT AMT	ADJ VALUE

TOTAL		ZONING	FRNT
Nbhd		NOTE	
St Ind			
Infl			

ASSESSED	CURRENT	PREVIOUS
LAND		
BUILDING	35,800	
DETACHED		
OTHER		
TOTAL		

DETACHED

TY	QUAL	COND	DIM/NOTE	YB	UNITS	ADJ PRICE	RCNLD

PHOTO 04/25/2008

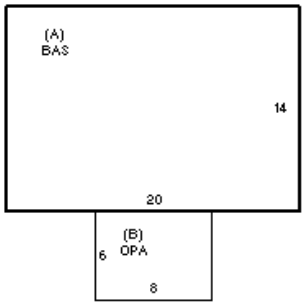

BLDG COMMENTS

UNIT 4, furthest from 6a - PINE SHACK

BUILDING

BUILDING	CD	ADJ	DESC
MODEL	1		RESIDENTIAL
STYLE	6	1.05	COTT/BUNGLW [100%]
QUALITY	L	0.75	LOW COST [100%]
FRAME	1	1.00	WD FRAME [100%]

MEASURE	4/11/2008	JH
LIST	4/24/2008	JH
REVIEW	7/23/2020	MR

YEAR BLT	1948	SIZE ADJ	1.000
NET AREA	280	DETAIL ADJ	1.000
$NLA(RCN)	$213	OVERALL	0.880

CAPACITY	UNITS	ADJ
STORIES	1	1.00
ROOMS	1	1.00
BEDROOMS	1	1.00
BATHROOMS	1	1.00
FIXTURES	3	$2,574
GARAGE SPACES	0	1.00
% BSMT FIN	0	1.00
# 1/2 BATHS	0	1.00
# OF UNITS	1	1.00

ELEMENT	CD	DESCRIPTION	ADJ
FOUNDATION	1	PIER	1.00
EXT COVER	9	COMPOS.	0.98
ROOF SHAPE	1	GABLE	1.00
ROOF COVER	1	ASPH/CMP SH	1.00
FLOOR COVER	2	SOFTWOOD	1.00
INT FINISH	2	DRYWALL	1.00
HEATING/COOL	13	NONE	0.90
FUEL SOURCE	8	NONE	0.95

S	BAT	T	DESCRIPTION	UNITS	YB	ADJ PRICE	RCN
A	BAS	L	BASE AREA	280	1948	198.48	55,575
B	OPA	N	OPEN PORCH	48		33.00	1,584

TOTAL RCN	59,733
CONDITION ELEM	CD
EXTERIOR	F
INTERIOR	F
KITCHEN	F
BATHS	F
HEAT/ELEC	F

EFF.YR/AGE	1933 / 90	
COND	40	40 %
FUNC	0	
ECON	0	
DEPR	40	% GD 60
RCNLD		$35,800