Key: **236**

Town of BREWSTER - Fiscal Year 2025

9/17/2024 2:15 pm SEQ #: 249

LEGAL

CURRENT OWNER	PARCEL ID	LOCATION
SNYDER PAUL M **C/O SNYDER PAUL M TRUSTEE** **214 5TH STREET SE** **WASHINGTON, DC 20003**	**49-56-0**	**28 BREEZY MEADOW LANE**

TRANSFER HISTORY	DOS	T	SALE PRICE	BK-PG (Cert)
SNYDER PAUL M TRUSTEE	09/12/2024	F	10	36564-68
SNYDER PAUL M	10/05/2012	A	415,200	26737-6
SNYDER MARY G TRUSTEE	02/25/1994	F	100	9066-189

CLASS	CLASS%	DESCRIPTION	BN ID	BN	CARD
1010	100	SINGLE FAMILY		1	1 of 1

PMT NO	PMT DT	TY	DESC	AMOUNT	INSP	BY	1st	%
	10/27/2017	5	OTHER		10/27/2017	JMG	100	100
437	06/02/2017	7	ALTERATIONS	2,000	04/11/2018	NF	100	100
449	05/18/2016	7	ALTERATIONS	2,000	01/27/2017	NF	100	100
202	03/16/2016	7	ALTERATIONS	500	01/27/2017	NF	100	100
761	10/06/2015	1	NEW CONSTRUC		05/12/2016	WFF	100	100

LAND

CD	T	AC/SF/UN	Nbhd	St Ind	Infl	ADJ BASE	SAF	Topo	Lpi	VC	CREDIT AMT	ADJ VALUE
100	S	13,057	2 1.00	A 1.00	A 1.00	767,200	3.17	A 1.00	R12 3.50			728,740

TOTAL	13,057 SF	ZONING	RM	FRNT	0
Nbhd	NBHD 2	NOTE	Area changed for FY 16 per perimeter plan 653/26.		
St Ind	AVERAGE				
Infl	AVERAGE				

ASSESSED	CURRENT	PREVIOUS
LAND	728,700	550,000
BUILDING	639,200	610,200
DETACHED	0	0
OTHER	0	0
TOTAL	**1,367,900**	**1,160,200**

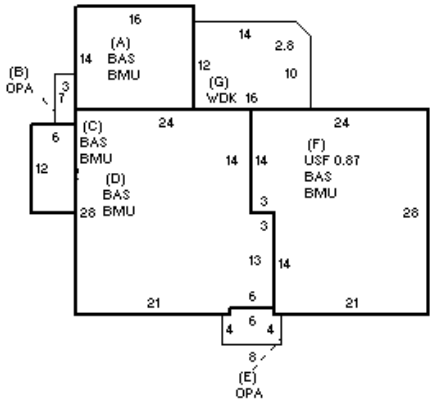

DETACHED

TY	QUAL	COND	DIM/NOTE	YB	UNITS	ADJ PRICE	RCNLD

PHOTO 01/27/2017

BLDG COMMENTS

EXTRA FIX - LAUNDRY

BUILDING

BUILDING	CD	ADJ	DESC
MODEL	1		RESIDENTIAL
STYLE	4	1.02	CAPE [100%]
QUALITY	+	1.10	PLUS AVE [100%]
FRAME	1	1.00	WD FRAME [100%]

MEASURE	10/27/2017	JMG
LIST	10/27/2017	JMG
REVIEW	6/19/2018	TD

YEAR BLT	2015	SIZE ADJ	1.000
NET AREA	2,182	DETAIL ADJ	1.000
$NLA(RCN)	$318	OVERALL	1.050

CAPACITY	UNITS	ADJ
STORIES	1.5	1.00
ROOMS	5	1.00
BEDROOMS	3	1.00
BATHROOMS	2	1.00
FIXTURES	7	$10,511
GARAGE SPACES	0	1.00
% BSMT FIN	0	1.00
# 1/2 BATHS	0	1.00
# OF UNITS	1	1.00

ELEMENT	CD	DESCRIPTION	ADJ
FOUNDATION	4	FLR & WALL	1.00
EXT COVER	1	WD SHINGLE	1.00
ROOF SHAPE	1	GABLE	1.00
ROOF COVER	1	ASPH/CMP SH	1.00
FLOOR COVER	1	HARDWOOD	1.00
INT FINISH	2	DRYWALL	1.00
HEATING/COOL	9	WARM/CL AIR	1.03
FUEL SOURCE	2	GAS	1.00

S	BAT	T	DESCRIPTION	UNITS	YB	ADJ PRICE	RCN
+	BMU	N	BSMT UNFINISHED	1,634		59.08	96,540
+	BAS	L	BASE AREA	1,634	2015	273.32	446,604
+	OPA	N	OPEN PORCH	59		57.75	3,407
F	USF	L	UPPER STORY FIN	548	2015	214.51	117,552
G	WDK	N	WOOD DECK	190		45.28	8,602
	F11	O	FPL 1S 1OP	1		8,820.70	8,821
	ODS	O	OUTDOOR SHOWER	1		2,789.30	2,789

TOTAL RCN	694,826

CONDITION ELEM	CD
EXTERIOR	A
INTERIOR	A
KITCHEN	A
BATHS	A
HEAT/ELEC	A

EFF.YR/AGE	2015 / 8		
COND	8	8 %	
FUNC	0		
ECON	0		
DEPR	8	% GD	92
RCNLD	$639,200		