Key: 2365

Town of BREWSTER - Fiscal Year 2025

9/17/2024 2:15 pm SEQ #: 2,522

LEGAL

CURRENT OWNER	PARCEL ID	LOCATION
FINCH ELIZABETH W TRUSTEE ELIZABETH W FINCH REV LVING TR 26 RED TOP ROAD BREWSTER, MA 02631	15-2-0	26 RED TOP ROAD

TRANSFER HISTORY	DOS	T	SALE PRICE	BK-PG (Cert)
FINCH ELIZABETH W TRUSTEE	08/08/2012	F	1	26570-123
FINCH ELIZABETH W	12/08/1995	H	100	9962-284

CLASS	CLASS%	DESCRIPTION	BN ID	BN	CARD
1010	100	SINGLE FAMILY		1	1 of 1

PMT NO	PMT DT	TY	DESC	AMOUNT	INSP	BY	1st	%
23-1205	12/12/2023	7	ALTERATIONS	1,673	07/18/2024	TCK	100	100
955	11/15/2022	5	OTHER	15,000	03/30/2023	TCK	100	100
2023-6		13	SPLIT/SUB/LA		05/16/2022	JMG	100	100
241	03/20/2013	7	ALTERATIONS	5,100	08/12/2014	RJM	100	100
81	02/17/1998	7	ALTERATIONS	8,420			100	100

LAND

CD	T	AC/SF/UN	Nbhd	St Ind	Infl	ADJ BASE	SAF	Topo	Lpi	VC	CREDIT AMT	ADJ VALUE
100	S	34,160	12 1.00	A 1.00	A 1.00	219,200	1.47	A 1.00	RM3 1.00			252,540

TOTAL	34,160 SF	ZONING	RM	FRNT	0
Nbhd	NBHD 12	NOTE	FY23 Subdivide 15-2 per Plan Bk 694 Pg 44, creating 15-76 & 15-77. This original house lot remains 15-2.		
St Ind	AVERAGE				
Infl	AVERAGE				

ASSESSED	CURRENT	PREVIOUS
LAND	252,500	238,300
BUILDING	482,400	462,000
DETACHED	8,600	8,500
OTHER	0	0
TOTAL	**743,500**	**708,800**

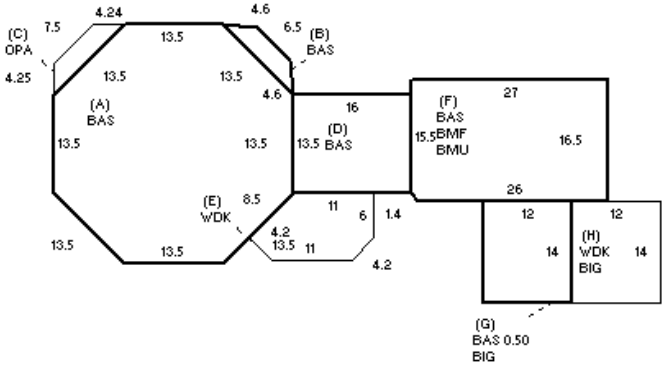

DETACHED

TY	QUAL	COND	DIM/NOTE	YB	UNITS	ADJ PRICE	RCNLD
SHF	A 1.00	30 0.70	18X27		486	18.29	6,200
GZB	A 1.00	30 0.70	8 SIDES		95	36.50	2,400

PHOTO 03/30/2023

BLDG COMMENTS
2 SOLAR PANELS

BUILDING

BUILDING	CD	ADJ	DESC
MODEL	1		RESIDENTIAL
STYLE	7	1.05	CONVEN/OLD [100%]
QUALITY	G	1.30	GOOD [100%]
FRAME	1	1.00	WD FRAME [100%]

MEASURE	2/14/2018	NF
LIST	2/14/2018	EST
REVIEW	7/29/2024	EMZ

YEAR BLT	1974	SIZE ADJ	1.000
NET AREA	1,655	DETAIL ADJ	1.000
$NLA(RCN)	$416	OVERALL	1.050

CAPACITY	UNITS	ADJ
STORIES	1	1.00
ROOMS	6	1.00
BEDROOMS	3	1.00
BATHROOMS	2	1.00
FIXTURES	6	$10,647
GARAGE SPACES	0	1.00
% BSMT FIN	0	1.00
# 1/2 BATHS	0	1.00
# OF UNITS	1	1.00

ELEMENT	CD	DESCRIPTION	ADJ
FOUNDATION	4	FLR & WALL	1.00
EXT COVER	2	CLAPBOARD	1.00
ROOF SHAPE	1	GABLE	1.00
ROOF COVER	1	ASPH/CMP SH	1.00
FLOOR COVER	2	SOFTWOOD	1.00
INT FINISH	1	PLASTER	1.00
HEATING/COOL	2	HOT WATER	1.00
FUEL SOURCE	1	OIL	1.00

S	BAT	T	DESCRIPTION	UNITS	YB	ADJ PRICE	RCN
+	BAS	L	BASE AREA	1,655	1974	323.01	534,587
C	OPA	N	OPEN PORCH	32		68.25	2,184
+	WDK	N	WOOD DECK	294		53.51	15,732
F	BMU	N	BSMT UNFINISHED	445		91.25	40,605
F	BMF	N	BSMT FINISH	445		55.06	24,500
G	BIG	N	BUILT-IN GARAGE	168		78.50	13,189
H	BIG	N	BUILT-IN GARAGE	168		78.50	13,189
	F11	O	FPL 1S 1OP	3		10,424.07	31,272
	ODS	O	OUTDOOR SHOWER	1		3,296.50	3,297

TOTAL RCN	689,201
CONDITION ELEM	CD
EXTERIOR	A
INTERIOR	A
KITCHEN	A
BATHS	A
HEAT/ELEC	A
EFF.YR/AGE	1974 / 49
COND	30 30 %
FUNC	0
ECON	0
DEPR	30 % GD 70
RCNLD	$482,400