Key: 2412

Town of BREWSTER - Fiscal Year 2025

9/17/2024 2:15 pm SEQ #: 2,567

LEGAL

CURRENT OWNER	PARCEL ID	LOCATION
BAIN LAWRENCE R & DEBORAH A 13 ACADEMY HILL LANE SOUTH DENNIS, MA 02660	5-71-0	62 BRIDLE PATH ROAD

TRANSFER HISTORY	DOS	T	SALE PRICE	BK-PG (Cert)
BAIN LAWRENCE R & DEBORAH	12/19/2011	S	195,000	25935-211
SOVEREIGN BANK	06/03/2011	L	186,825	25488-55
GOLDEN STEVEN M &	07/14/2006	QS	348,500	21185-106

CLASS	CLASS%	DESCRIPTION	BN ID	BN	CARD
1010	100	SINGLE FAMILY		1	1 of 1

PMT NO	PMT DT	TY	DESC	AMOUNT	INSP	BY	1st	%
23-615	05/28/2023	7	ALTERATIONS	20,880	06/06/2024	TCK	100	100

LAND

CD	T	AC/SF/UN	Nbhd	St Ind	Infl	ADJ BASE	SAF	Topo	Lpi	VC	CREDIT AMT	ADJ VALUE
100	S	16,264	12 1.00	12L 1.00	A 1.00	219,200	2.63	A 1.00	R03 1.00			215,140

TOTAL	16,264 SF	ZONING	RM	FRNT	0
Nbhd	NBHD 12	NOTE			
St Ind	BRIDLEPATH				
Infl	AVERAGE				

ASSESSED	CURRENT	PREVIOUS
LAND	215,100	203,000
BUILDING	291,000	265,300
DETACHED	0	0
OTHER	0	0
TOTAL	**506,100**	**468,300**

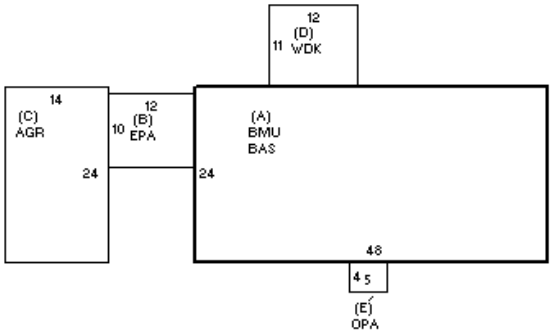

DETACHED

TY	QUAL	COND	DIM/NOTE	YB	UNITS	ADJ PRICE	RCNLD

PHOTO 06/14/2024

BLDG COMMENTS

BUILDING

BUILDING	CD	ADJ	DESC
MODEL	1		RESIDENTIAL
STYLE	1	1.00	RANCH [100%]
QUALITY	A	1.00	AVG [100%]
FRAME	1	1.00	WD FRAME [100%]

MEASURE	2/6/2018	NF
LIST	2/15/2008	JH
REVIEW	6/14/2024	EMZ

YEAR BLT	1973	SIZE ADJ	1.000
NET AREA	1,152	DETAIL ADJ	1.000
$NLA(RCN)	$351	OVERALL	1.000

CAPACITY	UNITS	ADJ
STORIES	1	1.00
ROOMS	6	1.00
BEDROOMS	3	1.00
BATHROOMS	1	1.00
FIXTURES	5	$6,500
GARAGE SPACES	1	1.00
% BSMT FIN	0	1.00
# 1/2 BATHS	1	1.00
# OF UNITS	1	1.00

ELEMENT	CD	DESCRIPTION	ADJ
FOUNDATION	4	FLR & WALL	1.00
EXT COVER	1	WD SHINGLE	1.00
ROOF SHAPE	1	GABLE	1.00
ROOF COVER	1	ASPH/CMP SH	1.00
FLOOR COVER	3	W/W CARPET	1.00
INT FINISH	2	DRYWALL	1.00
HEATING/COOL	1	FORCED AIR	1.00
FUEL SOURCE	2	GAS	1.00

S	BAT	T	DESCRIPTION	UNITS	YB	ADJ PRICE	RCN
A	BAS	L	BASE AREA	1,152	1973	253.89	292,487
A	BMU	N	BSMT UNFINISHED	1,152		56.46	65,045
B	EPA	N	ENCLOSED PORCH	120		80.50	9,660
C	AGR	N	ATT GARAGE	336		42.24	14,192
D	WDK	N	WOOD DECK	132		39.20	5,174
E	OPA	N	OPEN PORCH	20		50.00	1,000
	F11	O	FPL 1S 1OP	1		7,637.00	7,637
	ODS	O	OUTDOOR SHOWER	1		2,415.00	2,415

TOTAL RCN	404,110

CONDITION ELEM	CD
EXTERIOR	G
INTERIOR	A
KITCHEN	A
BATHS	A
HEAT/ELEC	A

EFF.YR/AGE	1977 / 46		
COND	28	28 %	
FUNC	0		
ECON	0		
DEPR	28	% GD	72
RCNLD			$291,000