Key: 3005

Town of BREWSTER - Fiscal Year 2025

9/17/2024 2:15 pm SEQ #: 3.196

LEGAL

CURRENT OWNER	PARCEL ID	LOCATION
GOFF JOHN F IV & JILLIAN L 159 SNOW ROAD BREWSTER, MA 02631	76-63-0	159 SNOW ROAD

TRANSFER HISTORY	DOS	T	SALE PRICE	BK-PG (Cert)
GOFF JOHN F IV & JILLIAN	08/24/2018	A	1	31488-319
GOFF JOHN F III & BRENDA	01/31/2002	QS	120,000	14769-125
PHILBRICK JACQUELIN H TRU	03/24/1994	F	100	9109-031

CLASS	CLASS%	DESCRIPTION	BN ID	BN	CARD
1010	100	SINGLE FAMILY		1	1 of 1

PMT NO	PMT DT	TY	DESC	AMOUNT	INSP	BY	1st	%
866	09/21/2021	7	ALTERATIONS	2,500	04/21/2022	TCK	100	100
		12	CYCLICAL NON		02/02/2021	TCK	100	100
713	08/05/2019	2	ADD	15,000	07/13/2020	TCK	100	100
26	01/15/2008	2	ADD	120,000	04/21/2010	JH	100	100
551	08/29/2007	2	ADD	1,000	09/24/2008	JH	100	100

LAND

CD	T	AC/SF/UN	Nbhd	St Ind	Infl	ADJ BASE	SAF	Topo	Lpi	VC	CREDIT AMT	ADJ VALUE
100	S	17,746	13 1.00	A 1.00	A 1.00	197,280	2.44	A 1.00	RM3 0.90			196,260

TOTAL	17,729 SF	ZONING	RM	FRNT	0
Nbhd	NBHD 13	NOTE			
St Ind	AVERAGE				
Infl	AVERAGE				

ASSESSED	CURRENT	PREVIOUS
LAND	196,300	185,200
BUILDING	489,200	462,000
DETACHED	1,000	1,000
OTHER	0	0
TOTAL	686,500	648,200

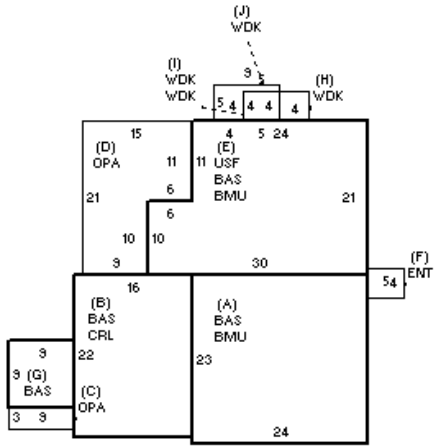

DETACHED

TY	QUAL	COND	DIM/NOTE	YB	UNITS	ADJ PRICE	RCNLD
SHF	A 1.00	10 0.90	6X8		48	22.94	1,000

PHOTO 04/21/2022

BUILDING

BUILDING	CD	ADJ	DESC
MODEL	1		RESIDENTIAL
STYLE	3	0.95	SPLIT LEVEL [100%]
QUALITY	A	1.00	AVG [100%]
FRAME	1	1.00	WD FRAME [100%]

MEASURE	2/2/2021	TCK
LIST	2/2/2021	EST
REVIEW	4/29/2022	MR

BLDG COMMENTS

INFO @ DOOR (2/2/2021)

YEAR BLT	1986	SIZE ADJ	1.000
NET AREA	2,113	DETAIL ADJ	1.000
$NLA(RCN)	$272	OVERALL	0.980

CAPACITY	UNITS	ADJ
STORIES	1	1.00
ROOMS	8	1.00
BEDROOMS	3	1.00
BATHROOMS	3	1.00
FIXTURES	9	$11,466
GARAGE SPACES	0	1.00
% BSMT FIN	0	1.00
# 1/2 BATHS	0	1.00
# OF UNITS	1	1.00

ELEMENT	CD	DESCRIPTION	ADJ
FOUNDATION	4	FLR & WALL	1.00
EXT COVER	1	WD SHINGLE	1.00
ROOF SHAPE	1	GABLE	1.00
ROOF COVER	1	ASPH/CMP SH	1.00
FLOOR COVER	2	SOFTWOOD	1.00
INT FINISH	2	DRYWALL	1.00
HEATING/COOL	9	WARM/CL AIR	1.03
FUEL SOURCE	2	GAS	1.00

S	BAT	T	DESCRIPTION	UNITS	YB	ADJ PRICE	RCN
+	BMU	N	BSMT UNFINISHED	1,116		55.33	61,753
+	BAS	L	BASE AREA	904	1986	236.74	214,011
B	CRL	N	BSMT CRAWL	352		29.76	10,474
+	OPA	N	OPEN PORCH	282		49.00	13,818
E	BAS	L	BASE AREA	564	2008	236.74	133,520
E	USF	L	UPPER STORY FIN	564	2008	182.01	102,653
F	ENT	N	ENCLOSED ENTRY	20		157.68	3,154
G	BAS	L	BASE AREA	81	2019	236.74	19,176
+	WDK	N	WOOD DECK	81		38.41	3,112
	ODS	O	OUTDOOR SHOWER	1		2,366.70	2,367

TOTAL RCN	575,503

CONDITION ELEM	CD
EXTERIOR	G
INTERIOR	A
KITCHEN	A
BATHS	A
HEAT/ELEC	A

EFF.YR/AGE	2003 / 20		
COND	15	15 %	
FUNC	0		
ECON	0		
DEPR	15	% GD	85
RCNLD			$489,200