Key: 3441

Town of BREWSTER - Fiscal Year 2025

9/17/2024 2:15 pm SEQ #: 3,652

LEGAL

CURRENT OWNER	PARCEL ID	LOCATION
SANTAGATI ANTHONY J JR & BRENDA M 46 STRAWBERRY LANE ABINGTON, MA 02351	100-38-0	210 BLUEBERRY POND DRIVE

TRANSFER HISTORY	DOS	T	SALE PRICE	BK-PG (Cert)
SANTAGATI ANTHONY J JR &	07/26/2019	QS	690,000	(220082)
PAVLU EDWARD J &	04/04/2013	P	186,250	(200000)
DALLAMORA THOMAS	06/27/2000	H	85,000	(158190)

CLASS	CLASS%	DESCRIPTION	BN ID	BN	CARD
1010	100	SINGLE FAMILY		1	1 of 1

PMT NO	PMT DT	TY	DESC	AMOUNT	INSP	BY	1st	%
	07/26/2019	16	MLS REVIEW	690,000	06/11/2020	JMG	100	100
373	05/05/2014	5	OTHER		06/01/2015	MW	100	100
556	07/03/2013	1	NEW CONSTRUC	250,000	06/01/2015	MW	100	100
		12	CYCLICAL NON		09/26/2003	JB	100	100

LAND

CD	T	AC/SF/UN	Nbhd	St Ind	Infl	ADJ BASE	SAF	Topo	Lpi	VC	CREDIT AMT	ADJ VALUE
100	S	31,800	13 1.00	13J 1.00	A 1.00	252,080	1.55	A 1.00	R06 1.15			284,720

TOTAL	31,800 SF	ZONING	RM	FRNT	0
Nbhd	NBHD 13	NOTE	HSE # 210 FROM BLD PERMIT		
St Ind	BLUEBERRY POND				
Infl	AVERAGE				

ASSESSED	CURRENT	PREVIOUS
LAND	284,700	268,600
BUILDING	686,200	648,000
DETACHED	0	0
OTHER	0	0
TOTAL	**970,900**	**916,600**

DETACHED

TY	QUAL	COND	DIM/NOTE	YB	UNITS	ADJ PRICE	RCNLD

PHOTO 11/25/2020

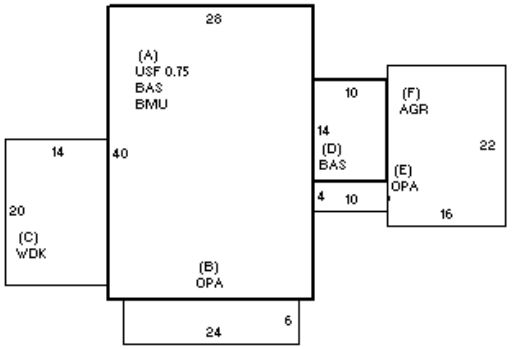

BLDG COMMENTS

BUILDING

BUILDING	CD	ADJ	DESC
MODEL	1		RESIDENTIAL
STYLE	5	1.05	COLONIAL [100%]
QUALITY	A+	1.20	AVG + [100%]
FRAME	1	1.00	WD FRAME [100%]

MEASURE	11/25/2020	TCK
LIST	11/25/2020	EST
REVIEW	2/4/2021	MR

YEAR BLT	2013	SIZE ADJ	1.000
NET AREA	2,100	DETAIL ADJ	1.000
$NLA(RCN)	$359	OVERALL	1.080

CAPACITY	UNITS	ADJ
STORIES	2	1.00
ROOMS	6	1.00
BEDROOMS	3	1.00
BATHROOMS	2	1.00
FIXTURES	8	$13,478
GARAGE SPACES	2	1.00
% BSMT FIN	0	1.00
# 1/2 BATHS	1	1.00
# OF UNITS	1	1.00

ELEMENT	CD	DESCRIPTION	ADJ
FOUNDATION	4	FLR & WALL	1.00
EXT COVER	1	WD SHINGLE	1.00
ROOF SHAPE	1	GABLE	1.00
ROOF COVER	1	ASPH/CMP SH	1.00
FLOOR COVER	1	HARDWOOD	1.00
INT FINISH	2	DRYWALL	1.00
HEATING/COOL	9	WARM/CL AIR	1.03
FUEL SOURCE	2	GAS	1.00

S	BAT	T	DESCRIPTION	UNITS	YB	ADJ PRICE	RCN
A	BMU	N	BSMT UNFINISHED	1,120		73.18	81,958
A	USF	L	UPPER STORY FIN	840	2013	235.84	198,101
+	OPA	N	OPEN PORCH	184		64.80	11,923
C	WDK	N	WOOD DECK	280		50.80	14,225
+	BAS	L	BASE AREA	1,260	2013	319.46	402,525
F	AGR	N	ATT GARAGE	352		53.62	18,875
	BMG	O	BSMT GARAGE	1		5,763.30	5,763
	GFP	O	GAS FIREPLACE	1		4,051.30	4,051
	ODS	O	OUTDOOR SHOWER	1		3,129.80	3,130

TOTAL RCN	754,030

CONDITION ELEM	CD
EXTERIOR	A
INTERIOR	A
KITCHEN	A
BATHS	A
HEAT/ELEC	A

EFF.YR/AGE	2013 / 10	
COND	10	10 %
FUNC	0	
ECON	0	
DEPR	9	% GD 91
RCNLD		$686,200