Key: 3518

Town of BREWSTER - Fiscal Year 2025

9/17/2024 2:15 pm SEQ #: 3,729

LEGAL

CURRENT OWNER	PARCEL ID	LOCATION
BULL JUSTIN J & TRACY M TRUSTEES THE TRACY & JUSTIN BULL LIVING TRUST 166 MAIN STREET CONCORD, MA 01742	89-64-0	136 NORTH POND DRIVE

TRANSFER HISTORY	DOS	T	SALE PRICE	BK-PG (Cert)
BULL JUSTIN J & TRACY M T	05/11/2021	F	1	34098-121
BULL JUSTIN J & TRACY M	08/27/2020	QS	492,000	33205-64
GLEASON ELLEN H TRUSTEE	06/16/2014	F	1	28206-321

CLASS	CLASS%	DESCRIPTION	BN ID	BN	CARD
1010	100	SINGLE FAMILY		1	1 of 1

PMT NO	PMT DT	TY	DESC	AMOUNT	INSP	BY	1st	%
22-910	11/02/2022	2	ADD	350,000	05/20/2024	TCK	100	100
	08/27/2020	15	SALE REVIEW	492,000	03/02/2021	JMG	100	100
		12	CYCLICAL NON		04/29/2013	SF	100	100

LAND

CD	T	AC/SF/UN	Nbhd	St Ind	Infl	ADJ BASE	SAF	Topo	Lpi	VC	CREDIT AMT	ADJ VALUE
100	S	24,400	13 1.00	13M 1.00	A 1.00	274,000	1.89	A 1.00	PV6 1.25			289,910

TOTAL	24,400 SF	ZONING	RM	FRNT	0
Nbhd	NBHD 13	NOTE	SLIGHT POND VIEW		
St Ind	LUND FARM				
Infl	AVERAGE				

ASSESSED	CURRENT	PREVIOUS
LAND	289,900	273,500
BUILDING	463,100	324,900
DETACHED	1,300	1,300
OTHER	0	0
TOTAL	**754,300**	**599,700**

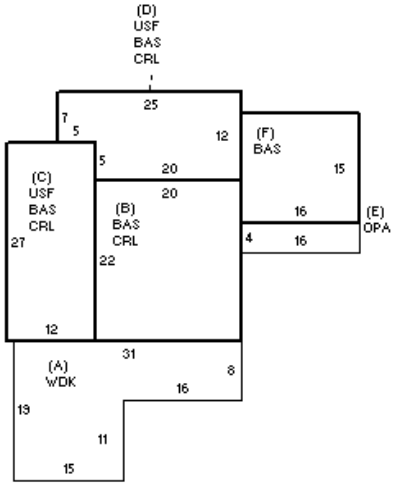

DETACHED

TY	QUAL	COND	DIM/NOTE	YB	UNITS	ADJ PRICE	RCNLD
SHF	A 1.00	50 0.50	10 X 12		120	21.39	1,300

PHOTO 06/05/2024

BUILDING

BUILDING	CD	ADJ	DESC
MODEL	1		RESIDENTIAL
STYLE	3	0.95	SPLIT LEVEL [100%]
QUALITY	+	1.10	PLUS AVE [100%]
FRAME	1	1.00	WD FRAME [100%]

MEASURE	12/29/2020	TCK
LIST	4/29/2013	SF
REVIEW	6/5/2024	EMZ

BLDG COMMENTS

INFO @ DOOR (12/29/20)

YEAR BLT	1969	SIZE ADJ	1.000
NET AREA	1,878	DETAIL ADJ	1.000
$NLA(RCN)	$283	OVERALL	0.960

CAPACITY	UNITS	ADJ
STORIES	2	1.00
ROOMS	7	1.00
BEDROOMS	4	1.00
BATHROOMS	2	1.00
FIXTURES	9	$12,355
GARAGE SPACES	0	1.00
% BSMT FIN	0	1.00
# 1/2 BATHS	1	1.00
# OF UNITS	1	1.00

ELEMENT	CD	DESCRIPTION	ADJ
FOUNDATION	5	OTHER	1.00
EXT COVER	1	WD SHINGLE	1.00
ROOF SHAPE	1	GABLE	1.00
ROOF COVER	1	ASPH/CMP SH	1.00
FLOOR COVER	2	SOFTWOOD	1.00
INT FINISH	2	DRYWALL	1.00
HEATING/COOL	15	HTWT+DCTLS AC	1.01
FUEL SOURCE	2	GAS	1.00

S	BAT	T	DESCRIPTION	UNITS	YB	ADJ PRICE	RCN
A	WDK	N	WOOD DECK	413		41.40	17,097
B	CRL	N	BSMT CRAWL	440		32.06	14,108
+	BAS	L	BASE AREA	1,039	1969	260.30	270,456
C	CRL	N	BSMT CRAWL	324		32.06	10,389
+	USF	L	UPPER STORY FIN	599	1969	196.13	117,479
D	CRL	N	BSMT CRAWL	275		32.06	8,818
E	OPA	N	OPEN PORCH	64		52.80	3,379
F	BAS	L	BASE AREA	240	2023	260.30	62,473
	F22	O	FPL 2S 2OP	1		13,170.40	13,170
	ODS	O	OUTDOOR SHOWER	1		2,550.20	2,550

TOTAL RCN	532,275
CONDITION ELEM	CD
EXTERIOR	A
INTERIOR	V
KITCHEN	V
BATHS	V
HEAT/ELEC	V
EFF.YR/AGE	2007 / 16
COND	13 13 %
FUNC	0
ECON	0
DEPR	13 % GD 87
RCNLD	$463,100