Key: 441

Town of BREWSTER - Fiscal Year 2025

9/17/2024 2:15 pm SEQ #: 462

LEGAL

CURRENT OWNER	PARCEL ID	LOCATION
CONLON DANIEL & MARTINA 20 SENECA ROAD WINCHESTER, MA 01890	69-114-0	25 DENNISON ROAD

TRANSFER HISTORY	DOS	T	SALE PRICE	BK-PG (Cert)
CONLON DANIEL & MARTINA	02/04/1997	QS	170,000	10598-212

CLASS	CLASS%	DESCRIPTION	BN ID	BN	CARD
1010	100	SINGLE FAMILY		1	1 of 1

PMT NO	PMT DT	TY	DESC	AMOUNT	INSP	BY	1st	%
NP		12	CYCLICAL NON		10/02/2007	JH	100	100
573	09/25/2003	2	ADD	165,000	08/02/2004	WH	100	100

LAND

CD	T	AC/SF/UN	Nbhd	St Ind	Infl	ADJ BASE	SAF	Topo	Lpi	VC	CREDIT AMT	ADJ VALUE
100	S	18,620	5 1.00	A 1.00	A 1.00	876,800	2.35	A 1.00	BA+ 4.00			880,320

TOTAL	18,620 SF	ZONING	RM	FRNT	0
Nbhd	NBHD 5	NOTE			
St Ind	AVERAGE				
Infl	AVERAGE				

ASSESSED	CURRENT	PREVIOUS
LAND	880,300	830,500
BUILDING	625,500	599,800
DETACHED	2,800	2,800
OTHER	0	0
TOTAL	**1,508,600**	**1,433,100**

DETACHED

TY	QUAL	COND	DIM/NOTE	YB	UNITS	ADJ PRICE	RCNLD
HTB	A 1.00	30 0.70			1	4,058.10	2,800

PHOTO 10/23/2020

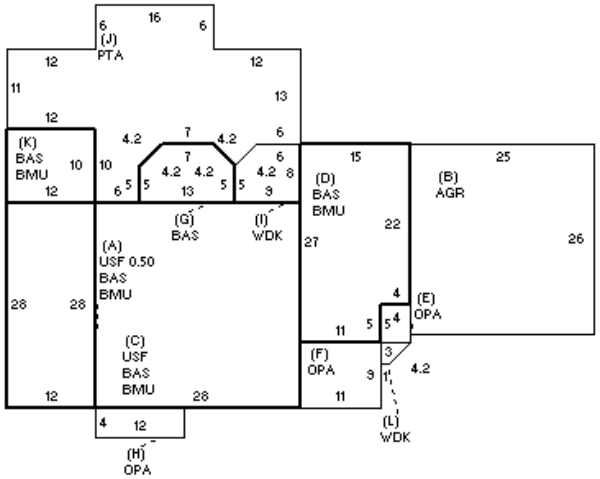

BLDG COMMENTS

BUILDING

BUILDING	CD	ADJ	DESC
MODEL	1		RESIDENTIAL
STYLE	7	1.05	CONVEN/OLD [100%]
QUALITY	G	1.30	GOOD [100%]
FRAME	1	1.00	WD FRAME [100%]

MEASURE	10/23/2020	NF
LIST	10/23/2020	EST
REVIEW	12/31/2020	MR

YEAR BLT	1954	SIZE ADJ	0.990
NET AREA	2,672	DETAIL ADJ	1.000
$NLA(RCN)	$372	OVERALL	1.050

CAPACITY	UNITS	ADJ
STORIES	2	1.00
ROOMS	8	1.00
BEDROOMS	4	1.00
BATHROOMS	2	1.00
FIXTURES	6	$10,647
GARAGE SPACES	1	1.00
% BSMT FIN	0	1.00
# 1/2 BATHS	0	1.00
# OF UNITS	1	1.00

ELEMENT	CD	DESCRIPTION	ADJ
FOUNDATION	4	FLR & WALL	1.00
EXT COVER	1	WD SHINGLE	1.00
ROOF SHAPE	1	GABLE	1.00
ROOF COVER	1	ASPH/CMP SH	1.00
FLOOR COVER	2	SOFTWOOD	1.00
INT FINISH	2	DRYWALL	1.00
HEATING/COOL	1	FORCED AIR	1.00
FUEL SOURCE	1	OIL	1.00

S	BAT	T	DESCRIPTION	UNITS	YB	ADJ PRICE	RCN
+	BMU	N	BSMT UNFINISHED	1,625		69.13	112,330
+	BAS	L	BASE AREA	1,625	1954	319.78	519,648
+	USF	L	UPPER STORY FIN	952	1954	245.91	234,104
B	AGR	N	ATT GARAGE	650		50.09	32,558
+	OPA	N	OPEN PORCH	167		67.57	11,284
G	BAS	L	BASE AREA	95	2004	319.79	30,380
+	WDK	N	WOOD DECK	76		52.97	4,026
J	PTA	N	PATIO	654		16.11	10,539
	F11	O	FPL 1S 1OP	1		10,320.30	10,320
	F21	O	FPL 2S 1OP	1		13,717.60	13,718
	ODS	O	OUTDOOR SHOWER	1		3,263.50	3,264

TOTAL RCN	992,816

CONDITION ELEM	CD
EXTERIOR	G
INTERIOR	A
KITCHEN	A
BATHS	A
HEAT/ELEC	A

EFF.YR/AGE	1959 / 64		
COND	37	37 %	
FUNC	0		
ECON	0		
DEPR	37	% GD	63
RCNLD	$625,500		