Key: 471

Town of BREWSTER - Fiscal Year 2025

9/17/2024 2:15 pm SEQ #: 491

LEGAL

CURRENT OWNER	PARCEL ID	LOCATION
O'BRYAN KEVIN M & PATRICIA A TRUSTEES 2 GLENKILL ROAD TROY, NY 12180	69-131-0	5 ROBINSON ROAD

TRANSFER HISTORY	DOS	T	SALE PRICE	BK-PG (Cert)
O'BRYAN KEVIN M & PATRICI	05/27/2020	F	1	32936-320
O'BRYAN KEVIN M & PATRICI	05/24/2017	F	1	30507-78
O'BRYAN KEVIN M & PATRICI	07/14/2006	QS	890,000	21186-025

CLASS	CLASS%	DESCRIPTION	BN ID	BN	CARD
1010	100	SINGLE FAMILY		1	1 of 1

PMT NO	PMT DT	TY	DESC	AMOUNT	INSP	BY	1st	%
848	10/02/2018	7	ALTERATIONS	1,725	07/09/2019	NF	100	100
622	10/01/2007	7	ALTERATIONS	3,000	09/18/2008	JH	100	100
539	08/22/2007	7	ALTERATIONS	30,000	09/18/2008	JH	100	100
584	10/08/1999	2	ADD	125,000	01/11/2000	LB	100	100

LAND

CD	T	AC/SF/UN	Nbhd	St Ind	Infl	ADJ BASE	SAF	Topo	Lpi	VC	CREDIT AMT	ADJ VALUE
100	S	12,038	5 1.00	A 1.00	A 1.00	767,200	3.41	A 1.00	R12 3.50			722,390

TOTAL	12,038 SF	ZONING	RM	FRNT	0
Nbhd	NBHD 5	NOTE			
St Ind	AVERAGE				
Infl	AVERAGE				

ASSESSED	CURRENT	PREVIOUS
LAND	722,400	545,200
BUILDING	532,700	503,200
DETACHED	0	0
OTHER	0	0
TOTAL	**1,255,100**	**1,048,400**

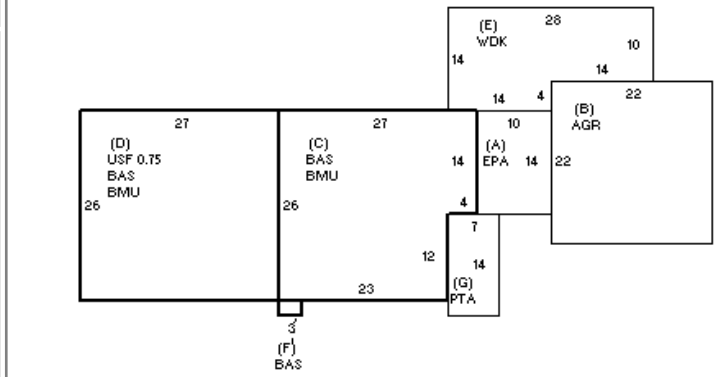

DETACHED

TY	QUAL	COND	DIM/NOTE	YB	UNITS	ADJ PRICE	RCNLD

PHOTO 10/22/2020

BLDG COMMENTS

BUILDING

BUILDING	CD	ADJ	DESC
MODEL	1		RESIDENTIAL
STYLE	8	0.95	CONTEMPOR [100%]
QUALITY	G-	1.20	GOOD - [100%]
FRAME	1	1.00	WD FRAME [100%]

MEASURE	10/22/2020	NF
LIST	10/22/2020	EST
REVIEW	12/31/2020	MR

YEAR BLT	1960	SIZE ADJ	1.000
NET AREA	1,889	DETAIL ADJ	1.000
$NLA(RCN)	$357	OVERALL	0.980

CAPACITY	UNITS	ADJ
STORIES	1.75	1.00
ROOMS	7	1.00
BEDROOMS	3	1.00
BATHROOMS	2	1.00
FIXTURES	10	$15,288
GARAGE SPACES	0	1.00
% BSMT FIN	0	1.00
# 1/2 BATHS	1	1.00
# OF UNITS	1	1.00

ELEMENT	CD	DESCRIPTION	ADJ
FOUNDATION	4	FLR & WALL	1.00
EXT COVER	1	WD SHINGLE	1.00
ROOF SHAPE	1	GABLE	1.00
ROOF COVER	1	ASPH/CMP SH	1.00
FLOOR COVER	1	HARDWOOD	1.00
INT FINISH	2	DRYWALL	1.00
HEATING/COOL	9	WARM/CL AIR	1.03
FUEL SOURCE	2	GAS	1.00

S	BAT	T	DESCRIPTION	UNITS	YB	ADJ PRICE	RCN
A	EPA	N	ENCLOSED PORCH	140		94.67	13,254
B	AGR	N	ATT GARAGE	484		46.63	22,570
+	BMU	N	BSMT UNFINISHED	1,356		63.90	86,652
D	USF	L	UPPER STORY FIN	527	1999	218.41	115,103
E	WDK	N	WOOD DECK	336		46.10	15,489
+	BAS	L	BASE AREA	1,362	1960	289.88	394,822
G	PTA	N	PATIO	98		21.50	2,107
	F11	O	FPL 1S 1OP	1		8,981.10	8,981

TOTAL RCN	674,267

CONDITION ELEM	CD
EXTERIOR	G
INTERIOR	G
KITCHEN	G
BATHS	G
HEAT/ELEC	G

EFF.YR/AGE	1991 / 32		
COND	21	21 %	
FUNC	0		
ECON	0		
DEPR	21	% GD	79
RCNLD			$532,700