Key: 4771

Town of BREWSTER - Fiscal Year 2025

9/17/2024 2:15 pm SEQ #: 4,986

LEGAL

CURRENT OWNER	PARCEL ID	LOCATION
YUEN HOYIN 151 OWL POND ROAD BREWSTER, MA 02631	137-11-0	151 OWL POND ROAD

TRANSFER HISTORY	DOS	T	SALE PRICE	BK-PG (Cert)
YUEN HOYIN	06/20/2019	A	1	(219736)
YUEN LIDA M TRUSTEE	11/01/2005	F		(178427)
YUEN LIDA M	11/01/2005	F		(178426)

CLASS	CLASS%	DESCRIPTION	BN ID	BN	CARD
1010	100	SINGLE FAMILY		1	1 of 1

PMT NO	PMT DT	TY	DESC	AMOUNT	INSP	BY	1st	%
834	11/17/2020	7	ALTERATIONS	16,000	12/09/2020	NF	100	100
495	08/04/2020	77	SOLAR PANELS	12,775	12/09/2020	NF	100	100
911	10/18/2019	10	INGROUND POO	79,800	12/09/2020	NF	100	100
		12	CYCLICAL NON		05/30/2019	NF	100	100
171	02/25/2019	7	ALTERATIONS	10,000	07/10/2020	NF	100	100

LAND

CD	T	AC/SF/UN	Nbhd	St Ind	Infl	ADJ BASE	SAF	Topo	Lpi	VC	CREDIT AMT	ADJ VALUE
100	S	21,491	9 1.00	9-B 1.00	A 1.00	241,120	2.09	A 1.00	R06 1.10			248,660

TOTAL	21,491 SF	ZONING	RM	FRNT	0
Nbhd	NBHD 9	NOTE			
St Ind	OWL POND				
Infl	AVERAGE				

ASSESSED	CURRENT	PREVIOUS
LAND	248,700	234,600
BUILDING	572,200	546,900
DETACHED	22,700	22,500
OTHER	0	0
TOTAL	**843,600**	**804,000**

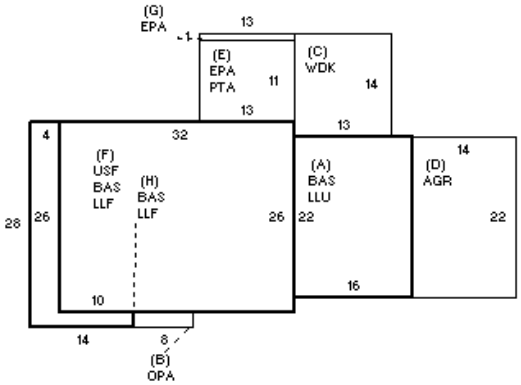

DETACHED

TY	QUAL	COND	DIM/NOTE	YB	UNITS	ADJ PRICE	RCNLD
IPV	G 1.20	01 1.00	16X32	2019	512	44.37	22,700

PHOTO 12/09/2020

BLDG COMMENTS

20 SOLAR PANELS

BUILDING

BUILDING	CD	ADJ	DESC
MODEL	1		RESIDENTIAL
STYLE	5	1.05	COLONIAL [100%]
QUALITY	A	1.00	AVG [100%]
FRAME	1	1.00	WD FRAME [100%]

MEASURE	5/30/2019	NF
LIST	5/30/2019	EST
REVIEW	1/20/2021	MR

YEAR BLT	1988	SIZE ADJ	0.980
NET AREA	3,112	DETAIL ADJ	1.000
$NLA(RCN)	$233	OVERALL	1.080

CAPACITY	UNITS	ADJ
STORIES	2	1.00
ROOMS	9	1.00
BEDROOMS	4	1.00
BATHROOMS	2	1.00
FIXTURES	6	$8,424
GARAGE SPACES	1	1.00
% BSMT FIN	0	1.00
# 1/2 BATHS	0	1.00
# OF UNITS	1	1.00

ELEMENT	CD	DESCRIPTION	ADJ
FOUNDATION	4	FLR & WALL	1.00
EXT COVER	1	WD SHINGLE	1.00
ROOF SHAPE	1	GABLE	1.00
ROOF COVER	1	ASPH/CMP SH	1.00
FLOOR COVER	1	HARDWOOD	1.00
INT FINISH	2	DRYWALL	1.00
HEATING/COOL	9	WARM/CL AIR	1.03
FUEL SOURCE	2	GAS	1.00

S	BAT	T	DESCRIPTION	UNITS	YB	ADJ PRICE	RCN
A	LLU	N	LOWER LEVEL UNF	352		97.80	34,425
+	BAS	L	BASE AREA	1,316	1988	260.90	343,339
B	OPA	N	OPEN PORCH	16		52.92	847
C	WDK	N	WOOD DECK	182		41.49	7,551
D	AGR	N	ATT GARAGE	308		44.70	13,769
E	PTA	N	PATIO	143		16.83	2,407
+	LLF	L	LOWER LEVEL FIN	964	1988	134.77	129,917
F	USF	L	UPPER STORY FIN	832	1988	192.60	160,243
+	EPA	N	ENCLOSED PORCH	156		80.94	12,627
	F21	O	FPL 2S 1OP	1		10,743.80	10,744

TOTAL RCN	724,290

CONDITION ELEM	CD
EXTERIOR	G
INTERIOR	A
KITCHEN	A
BATHS	A
HEAT/ELEC	A

EFF.YR/AGE	1991 / 32		
COND	21	21 %	
FUNC	0		
ECON	0		
DEPR	21	% GD	79
RCNLD			$572,200