Key: 4826

Town of BREWSTER - Fiscal Year 2025

9/17/2024 2:15 pm SEQ #: 5,042

LEGAL

CURRENT OWNER	PARCEL ID	LOCATION
STEVENS FREDERICK J 62 HAMILTON STREET READVILLE, MA 02137	125-38-0	44 HICKORY LANE

TRANSFER HISTORY	DOS	T	SALE PRICE	BK-PG (Cert)
STEVENS FREDERICK J	06/11/2019	A	10	32079-341
CARUSO ANNE D	08/12/1983	XX	79,900	3832-211

CLASS	CLASS%	DESCRIPTION	BN ID	BN	CARD
1010	100	SINGLE FAMILY		1	1 of 1

PMT NO	PMT DT	TY	DESC	AMOUNT	INSP	BY	1st	%
NP		12	CYCLICAL NON		02/05/2007	JH	100	100
207	05/19/1993	2	ADD		03/01/1994		100	100

LAND

CD	T	AC/SF/UN	Nbhd	St Ind	Infl	ADJ BASE	SAF	Topo	Lpi	VC	CREDIT AMT	ADJ VALUE
100	S	15,120	9 1.00	9-A 1.00	A 1.00	241,120	2.79	A 1.00	R06 1.10			233,900

TOTAL	15,120 SF	ZONING	RM	FRNT	0
Nbhd	NBHD 9	NOTE			
St Ind	ROBINWOOD				
Infl	AVERAGE				

ASSESSED	CURRENT	PREVIOUS
LAND	233,900	220,700
BUILDING	331,600	317,700
DETACHED	0	0
OTHER	0	0
TOTAL	**565,500**	**538,400**

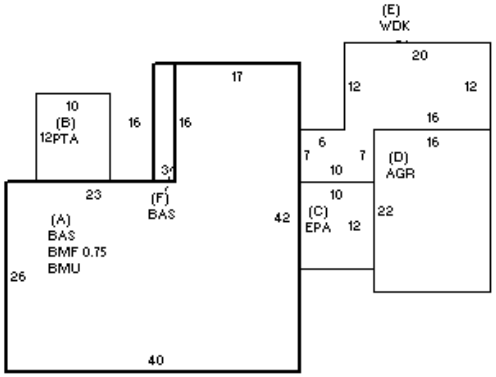

DETACHED

TY	QUAL	COND	DIM/NOTE	YB	UNITS	ADJ PRICE	RCNLD

PHOTO 05/23/2019

BLDG COMMENTS

BUILDING

BUILDING	CD	ADJ	DESC
MODEL	1		RESIDENTIAL
STYLE	1	1.00	RANCH [100%]
QUALITY	A	1.00	AVG [100%]
FRAME	1	1.00	WD FRAME [100%]

MEASURE	5/23/2019	NF
LIST	2/5/2007	JH
REVIEW	1/6/2020	MR

YEAR BLT	1970	SIZE ADJ	1.000
NET AREA	1,360	DETAIL ADJ	1.000
$NLA(RCN)	$359	OVERALL	1.000

CAPACITY	UNITS	ADJ
STORIES	1	1.00
ROOMS	5	1.00
BEDROOMS	2	1.00
BATHROOMS	2	1.00
FIXTURES	6	$7,800
GARAGE SPACES	1	1.00
% BSMT FIN	75	1.00
# 1/2 BATHS	0	1.00
# OF UNITS	1	1.00

ELEMENT	CD	DESCRIPTION	ADJ
FOUNDATION	4	FLR & WALL	1.00
EXT COVER	1	WD SHINGLE	1.00
ROOF SHAPE	1	GABLE	1.00
ROOF COVER	1	ASPH/CMP SH	1.00
FLOOR COVER	3	W/W CARPET	1.00
INT FINISH	2	DRYWALL	1.00
HEATING/COOL	2	HOT WATER	1.00
FUEL SOURCE	1	OIL	1.00

S	BAT	T	DESCRIPTION	UNITS	YB	ADJ PRICE	RCN
A	BMU	N	BSMT UNFINISHED	1,312		54.34	71,293
A	BMF	N	BSMT FINISH	984		35.60	35,030
B	PTA	N	PATIO	120		15.90	1,908
C	EPA	N	ENCLOSED PORCH	120		80.50	9,660
D	AGR	N	ATT GARAGE	352		41.38	14,564
E	WDK	N	WOOD DECK	310		39.20	12,152
+	BAS	L	BASE AREA	1,360	1970	246.50	335,240

TOTAL RCN	487,647

CONDITION ELEM	CD
EXTERIOR	A
INTERIOR	A
KITCHEN	A
BATHS	A
HEAT/ELEC	A

EFF.YR/AGE	1970 / 53		
COND	32	32 %	
FUNC	0		
ECON	0		
DEPR	32	% GD	68
RCNLD			$331,600