Key: 4834

Town of BREWSTER - Fiscal Year 2025

9/17/2024 2:15 pm SEQ #: 5,050

LEGAL

CURRENT OWNER	PARCEL ID	LOCATION
BEARDSLEY JOHN & LYNDA 220 HOLLY AVENUE BREWSTER, MA 02631	125-25-0	220 HOLLY AVENUE

TRANSFER HISTORY	DOS	T	SALE PRICE	BK-PG (Cert)
BEARDSLEY JOHN & LYNDA	01/13/1984	XX	16,500	3986-169

CLASS	CLASS%	DESCRIPTION	BN ID	BN	CARD
1010	100	SINGLE FAMILY		1	1 of 1

PMT NO	PMT DT	TY	DESC	AMOUNT	INSP	BY	1st	%
901	11/06/2017	7	ALTERATIONS	8,650	05/08/2018	NF	100	100
NP		12	CYCLICAL NON		02/02/2007	JH	100	100
51	02/05/1997	5	OTHER	6,200	04/07/1998	BC	100	100
103	03/28/1996	1	NEW CONSTRUC	115,000	04/07/1998	BC	100	100

LAND

CD	T	AC/SF/UN	Nbhd	St Ind	Infl	ADJ BASE	SAF	Topo	Lpi	VC	CREDIT AMT	ADJ VALUE
100	S	17,440	9 1.00	9-A 1.00	A 1.00	241,120	2.48	A 1.00	R06 1.10			239,070

TOTAL	17,440 SF	ZONING	RM	FRNT	0
Nbhd	NBHD 9	NOTE			
St Ind	ROBINWOOD				
Infl	AVERAGE				

ASSESSED	CURRENT	PREVIOUS
LAND	239,100	225,600
BUILDING	596,600	563,600
DETACHED	0	0
OTHER	0	0
TOTAL	**835,700**	**789,200**

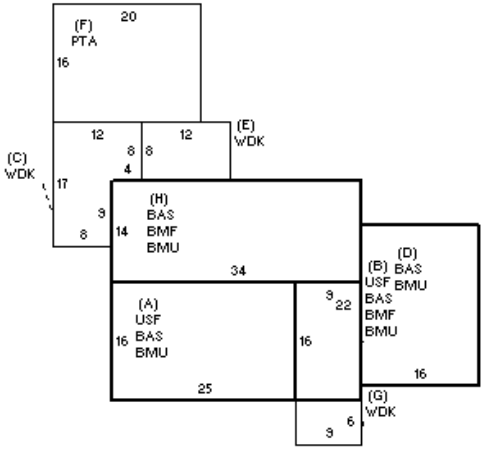

DETACHED

TY	QUAL	COND	DIM/NOTE	YB	UNITS	ADJ PRICE	RCNLD

PHOTO 05/28/2019

BLDG COMMENTS

BUILDING

BUILDING	CD	ADJ	DESC
MODEL	1		RESIDENTIAL
STYLE	5	1.05	COLONIAL [100%]
QUALITY	A+	1.20	AVG + [100%]
FRAME	1	1.00	WD FRAME [100%]

MEASURE	5/28/2019	NF
LIST	5/31/2007	JH
REVIEW	1/6/2020	MR

YEAR BLT	1997	SIZE ADJ	1.000
NET AREA	1,916	DETAIL ADJ	1.000
$NLA(RCN)	$380	OVERALL	1.050

CAPACITY	UNITS	ADJ
STORIES	1.75	1.00
ROOMS	6	1.00
BEDROOMS	2	1.00
BATHROOMS	3	1.00
FIXTURES	9	$14,742
GARAGE SPACES	1	1.00
% BSMT FIN	45	1.00
# 1/2 BATHS	0	1.00
# OF UNITS	1	1.00

ELEMENT	CD	DESCRIPTION	ADJ
FOUNDATION	4	FLR & WALL	1.00
EXT COVER	1	WD SHINGLE	1.00
ROOF SHAPE	6	SALTBOX	1.00
ROOF COVER	1	ASPH/CMP SH	1.00
FLOOR COVER	2	SOFTWOOD	1.00
INT FINISH	1	PLASTER	1.00
HEATING/COOL	2	HOT WATER	1.00
FUEL SOURCE	1	OIL	1.00

S	BAT	T	DESCRIPTION	UNITS	YB	ADJ PRICE	RCN
+	BMU	N	BSMT UNFINISHED	1,372		68.47	93,937
+	BAS	L	BASE AREA	1,372	1997	310.59	426,130
+	USF	L	UPPER STORY FIN	544	1997	234.01	127,303
+	BMF	N	BSMT FINISH	620		47.37	29,368
+	WDK	N	WOOD DECK	318		49.39	15,707
F	PTA	N	PATIO	320		17.03	5,450
	BMG	O	BSMT GARAGE	1		5,603.20	5,603
	MST	O	MAS/METAL STACK	1		6,334.00	6,334
	ODS	O	OUTDOOR SHOWER	1		3,042.90	3,043

TOTAL RCN	727,616

CONDITION ELEM	CD
EXTERIOR	A
INTERIOR	A
KITCHEN	A
BATHS	A
HEAT/ELEC	A

EFF.YR/AGE	1997 / 26	
COND	18	18 %
FUNC	0	
ECON	0	
DEPR	18	% GD 82
RCNLD		$596,600