Key: 494

Town of BREWSTER - Fiscal Year 2025

9/17/2024 2:15 pm SEQ #: 512

LEGAL

CURRENT OWNER	PARCEL ID	LOCATION
GLASS WILLIAM M & KATHERINE P TRUSTEES GLASS FAMILY TRUST 24 PILGRIM PINES LANE BREWSTER, MA 02631	69-53-0	24 PILGRIM PINES LANE

TRANSFER HISTORY	DOS	T	SALE PRICE	BK-PG (Cert)
GLASS WILLIAM M & KATHERI	08/15/2011	F	1	(194982)
GLASS WILLIAM M & KATHERI	12/07/1994	QS	168,400	(135756)
CONSTANCE EMORY ROLLINS E	01/17/1991	A	100	N/A-N/A

CLASS	CLASS%	DESCRIPTION	BN ID	BN	CARD
1010	100	SINGLE FAMILY		1	1 of 1

PMT NO	PMT DT	TY	DESC	AMOUNT	INSP	BY	1st	%
NP		12	CYCLICAL NON		07/05/2007	JH	100	100
697	09/29/2006	7	ALTERATIONS	2,500	07/05/2007	JH	100	100
31	01/30/2004	2	ADD	80,000	05/10/2005	JB	100	100
796	12/26/2001	7	ALTERATIONS	5,500			100	100
251	04/28/2000	2	ADD	4,800	05/01/2001	SJM	100	100

LAND

CD	T	AC/SF/UN	Nbhd	St Ind	Infl	ADJ BASE	SAF	Topo	Lpi	VC	CREDIT AMT	ADJ VALUE
100	S	13,600	5 1.00	A 1.00	A 1.00	767,200	3.06	A 1.00	R12 3.50			733,180

TOTAL	13,591 SF	ZONING	RM	FRNT	0
Nbhd	NBHD 5	NOTE			
St Ind	AVERAGE				
Infl	AVERAGE				

ASSESSED	CURRENT	PREVIOUS
LAND	733,200	553,400
BUILDING	518,100	489,400
DETACHED	1,500	1,500
OTHER	0	0
TOTAL	**1,252,800**	**1,044,300**

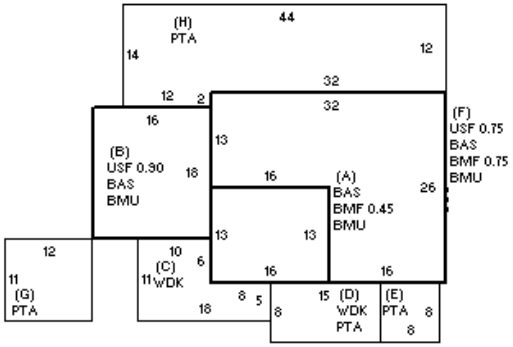

DETACHED

TY	QUAL	COND	DIM/NOTE	YB	UNITS	ADJ PRICE	RCNLD
SHF	A 1.00	30 0.70	8X12		96	22.01	1,500

PHOTO 10/28/2020

BLDG COMMENTS

BUILDING

BUILDING	CD	ADJ	DESC
MODEL	1		RESIDENTIAL
STYLE	4	1.02	CAPE [100%]
QUALITY	A+	1.20	AVG + [100%]
FRAME	1	1.00	WD FRAME [100%]

MEASURE	10/28/2020	NF
LIST	7/12/2007	JH
REVIEW	1/4/2021	MR

YEAR BLT	1969	SIZE ADJ	1.000
NET AREA	1,847	DETAIL ADJ	1.000
$NLA(RCN)	$364	OVERALL	1.030

CAPACITY	UNITS	ADJ
STORIES	1.75	1.00
ROOMS	7	1.00
BEDROOMS	3	1.00
BATHROOMS	2	1.00
FIXTURES	8	$12,854
GARAGE SPACES	1	1.00
% BSMT FIN	50	1.00
# 1/2 BATHS	1	1.00
# OF UNITS	1	1.00

ELEMENT	CD	DESCRIPTION	ADJ
FOUNDATION	4	FLR & WALL	1.00
EXT COVER	1	WD SHINGLE	1.00
ROOF SHAPE	1	GABLE	1.00
ROOF COVER	1	ASPH/CMP SH	1.00
FLOOR COVER	1	HARDWOOD	1.00
INT FINISH	2	DRYWALL	1.00
HEATING/COOL	16	FHA+DCTLS AC	1.01
FUEL SOURCE	2	GAS	1.00

S	BAT	T	DESCRIPTION	UNITS	YB	ADJ PRICE	RCN
+	BMU	N	BSMT UNFINISHED	1,120		69.79	78,163
+	BMF	N	BSMT FINISH	562		49.85	28,018
A	BAS	L	BASE AREA	208	1969	313.81	65,273
B	BAS	L	BASE AREA	288	2004	313.82	90,379
B	USF	L	UPPER STORY FIN	259	2004	227.24	58,855
+	WDK	N	WOOD DECK	270		48.45	13,082
D	PTA	N	PATIO	120		19.65	2,358
E	PTA	N	PATIO	64		25.55	1,635
F	BAS	L	BASE AREA	624	1969	313.81	195,820
F	USF	L	UPPER STORY FIN	468	1969	227.24	106,347
G	PTA	N	PATIO	132		19.65	2,594
H	PTA	N	PATIO	552		14.74	8,137
	BMG	O	BSMT GARAGE	1		5,496.50	5,497
	GFP	O	GAS FIREPLACE	1		3,863.70	3,864

TOTAL RCN	672,875

CONDITION ELEM	CD
EXTERIOR	G
INTERIOR	G
KITCHEN	A
BATHS	A
HEAT/ELEC	A

EFF.YR/AGE	1987 / 36		
COND	23	23 %	
FUNC	0		
ECON	0		
DEPR	23	% GD	77
RCNLD	$518,100		