Key: 5055

Town of BREWSTER - Fiscal Year 2025

9/17/2024 2:15 pm SEQ #: 5,280

LEGAL

CURRENT OWNER	PARCEL ID	LOCATION
MILLER JAMES W 411 HOLLY AVE BREWSTER, MA 02631	125-103-0	411 HOLLY AVENUE

TRANSFER HISTORY	DOS	T	SALE PRICE	BK-PG (Cert)
MILLER JAMES W	03/15/2019	QS	460,000	31890-271
DONOHUE THERESA E	09/03/2004	DC		19006-071
DONOHUE PATRICK & THERESA	02/01/1999	QS	179,000	12033-333

CLASS	CLASS%	DESCRIPTION	BN ID	BN	CARD
1010	100	SINGLE FAMILY		1	1 of 1

PMT NO	PMT DT	TY	DESC	AMOUNT	INSP	BY	1st	%
24-322	04/03/2024	7	ALTERATIONS	1,600	05/28/2024	TCK	100	100
23-1079	10/13/2023	7	ALTERATIONS	7,000	05/28/2024	TCK	100	100
244	04/17/2020	7	ALTERATIONS	40,000	12/09/2020	NF	100	100
	03/15/2019	15	SALE REVIEW	460,000	02/06/2020	JMG	100	100
	10/27/2017	5	OTHER		10/27/2017	JMG	100	100

LAND

CD	T	AC/SF/UN	Nbhd	St Ind	Infl	ADJ BASE	SAF	Topo	Lpi	VC	CREDIT AMT	ADJ VALUE
100	S	15,120	9 1.00	9-A 1.00	A 1.00	241,120	2.79	A 1.00	R06 1.10			233,900

TOTAL	15,120 SF	ZONING	RR	FRNT	0
Nbhd	NBHD 9	NOTE			
St Ind	ROBINWOOD				
Infl	AVERAGE				

ASSESSED	CURRENT	PREVIOUS
LAND	233,900	220,700
BUILDING	388,200	371,700
DETACHED	0	0
OTHER	0	0
TOTAL	**622,100**	**592,400**

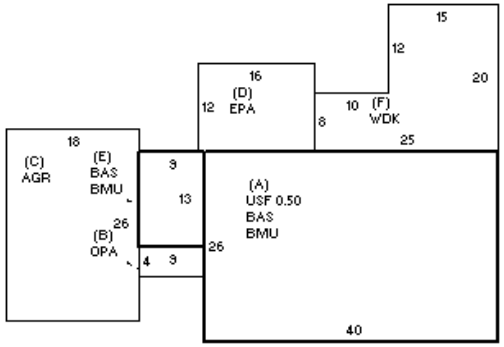

DETACHED

TY	QUAL	COND	DIM/NOTE	YB	UNITS	ADJ PRICE	RCNLD

PHOTO 06/11/2024

BUILDING

BUILDING	CD	ADJ	DESC
MODEL	1		RESIDENTIAL
STYLE	4	1.02	CAPE [100%]
QUALITY	A	1.00	AVG [100%]
FRAME	1	1.00	WD FRAME [100%]

MEASURE	10/27/2017	JMG
LIST	6/19/2019	NF
REVIEW	6/11/2024	EMZ

BLDG COMMENTS

HATCH TO ATTIC

YEAR BLT	1978	SIZE ADJ	1.000
NET AREA	1,677	DETAIL ADJ	1.000
$NLA(RCN)	$321	OVERALL	1.020

CAPACITY	UNITS	ADJ
STORIES	1.5	1.00
ROOMS	7	1.00
BEDROOMS	4	1.00
BATHROOMS	2	1.00
FIXTURES	8	$10,608
GARAGE SPACES	1	1.00
% BSMT FIN	0	1.00
# 1/2 BATHS	1	1.00
# OF UNITS	1	1.00

ELEMENT	CD	DESCRIPTION	ADJ
FOUNDATION	4	FLR & WALL	1.00
EXT COVER	1	WD SHINGLE	1.00
ROOF SHAPE	1	GABLE	1.00
ROOF COVER	1	ASPH/CMP SH	1.00
FLOOR COVER	1	HARDWOOD	1.00
INT FINISH	2	DRYWALL	1.00
HEATING/COOL	2	HOT WATER	1.00
FUEL SOURCE	1	OIL	1.00

S	BAT	T	DESCRIPTION	UNITS	YB	ADJ PRICE	RCN
+	BMU	N	BSMT UNFINISHED	1,157		57.59	66,635
+	BAS	L	BASE AREA	1,157	1978	258.97	299,632
A	USF	L	UPPER STORY FIN	520	1978	189.44	98,508
B	OPA	N	OPEN PORCH	36		51.00	1,836
C	AGR	N	ATT GARAGE	468		40.44	18,928
D	EPA	N	ENCLOSED PORCH	192		78.00	14,977
F	WDK	N	WOOD DECK	380		39.98	15,194
	F21	O	FPL 2S 1OP	1		10,354.00	10,354
	ODS	O	OUTDOOR SHOWER	1		2,463.30	2,463

TOTAL RCN	539,134

CONDITION ELEM	CD
EXTERIOR	A
INTERIOR	A
KITCHEN	A
BATHS	A
HEAT/ELEC	A

EFF.YR/AGE	1978 / 45		
COND	28	28 %	
FUNC	0		
ECON	0		
DEPR	28	% GD	72
RCNLD			$388,200