Key: 5241

Town of BREWSTER - Fiscal Year 2025

9/17/2024 2:15 pm SEQ #: 5,462

LEGAL

CURRENT OWNER	PARCEL ID	LOCATION
LIBBIN JOSEPH & SHARON 8 AUTUMN LANE NATICK, MA 01760	85-105-0	1169 MILLSTONE ROAD

TRANSFER HISTORY	DOS	T	SALE PRICE	BK-PG (Cert)
LIBBIN JOSEPH & SHARON	05/10/2022	QS	700,000	(229899)
RYAN ROBERT G TRUSTEE	08/26/2011	O	153,900	(195049)
ELLIS JOHN	01/19/2000	A	1	(156355)

CLASS	CLASS%	DESCRIPTION	BN ID	BN	CARD
1010	100	SINGLE FAMILY		1	1 of 1

PMT NO	PMT DT	TY	DESC	AMOUNT	INSP	BY	1st	%
	03/29/2023	22	I & E				0	0
	05/06/2022	16	MLS REVIEW	700,000	05/19/2023	JMG	100	100
	01/12/2021	22	I & E				0	0
	02/13/2020	22	I & E				0	0
437	08/24/2011	1	NEW CONSTRUC	240,000	02/13/2013	MR	100	100

LAND

CD	T	AC/SF/UN	Nbhd	St Ind	Infl	ADJ BASE	SAF	Topo	Lpi	VC	CREDIT AMT	ADJ VALUE
100	S	47,045	13 1.00	A 1.00	A 1.00	197,280	1.18	A 1.00	RM2 0.90			251,370

TOTAL	1.080 Acres	ZONING	RM	FRNT	0
Nbhd	NBHD 13	NOTE	HOUSE # 1169 PER BFD 8/24/11		
St Ind	AVERAGE				
Infl	AVERAGE				

ASSESSED	CURRENT	PREVIOUS
LAND	251,400	237,200
BUILDING	477,800	456,200
DETACHED	0	0
OTHER	0	0
TOTAL	**729,200**	**693,400**

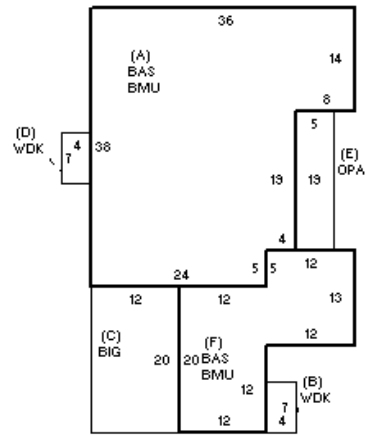

DETACHED

TY	QUAL	COND	DIM/NOTE	YB	UNITS	ADJ PRICE	RCNLD

PHOTO 02/13/2013

BLDG COMMENTS

BUILDING

BUILDING	CD	ADJ	DESC
MODEL	1		RESIDENTIAL
STYLE	1	1.00	RANCH [100%]
QUALITY	+	1.10	PLUS AVE [100%]
FRAME	1	1.00	WD FRAME [100%]

MEASURE	3/8/2012	MR
LIST	2/13/2013	MR
REVIEW	5/19/2023	JMG

YEAR BLT	2011	SIZE ADJ	1.000
NET AREA	1,552	DETAIL ADJ	1.000
$NLA(RCN)	$346	OVERALL	1.000

CAPACITY	UNITS	ADJ
STORIES	1	1.00
ROOMS	5	1.00
BEDROOMS	3	1.00
BATHROOMS	2	1.00
FIXTURES	6	$8,580
GARAGE SPACES	1	1.00
% BSMT FIN	0	1.00
# 1/2 BATHS	0	1.00
# OF UNITS	1	1.00

ELEMENT	CD	DESCRIPTION	ADJ
FOUNDATION	4	FLR & WALL	1.00
EXT COVER	4	VINYL	1.00
ROOF SHAPE	1	GABLE	1.00
ROOF COVER	1	ASPH/CMP SH	1.00
FLOOR COVER	1	HARDWOOD	1.00
INT FINISH	2	DRYWALL	1.00
HEATING/COOL	2	HOT WATER	1.00
FUEL SOURCE	2	GAS	1.00

S	BAT	T	DESCRIPTION	UNITS	YB	ADJ PRICE	RCN
+	BMU	N	BSMT UNFINISHED	1,552		57.89	89,847
+	BAS	L	BASE AREA	1,552	2011	265.73	412,409
+	WDK	N	WOOD DECK	56		43.12	2,415
C	BIG	N	BUILT-IN GARAGE	240		62.04	14,891
E	OPA	N	OPEN PORCH	95		55.00	5,225
	GFP	O	GAS FIREPLACE	1		3,438.60	3,439

TOTAL RCN	536,804

CONDITION ELEM	CD
EXTERIOR	A
INTERIOR	A
KITCHEN	A
BATHS	A
HEAT/ELEC	A

EFF.YR/AGE	2011 / 12	
COND	11 11 %	
FUNC	0	
ECON	0	
DEPR	11	% GD 89
RCNLD		$477,800